NASA-TM-83546

March 1984

Large, Horizontal-Axis Wind Turbines

NASA-TM-83546
19840019259

Bradford S. Linscott
National Aeronautics and Space Administration
Lewis Research Center

Porter Perkins
Analex Corporation
and
Joann T. Dennett
RDD Consultants, Inc.

DOE/NASA/20320-58
NASA TM-83546

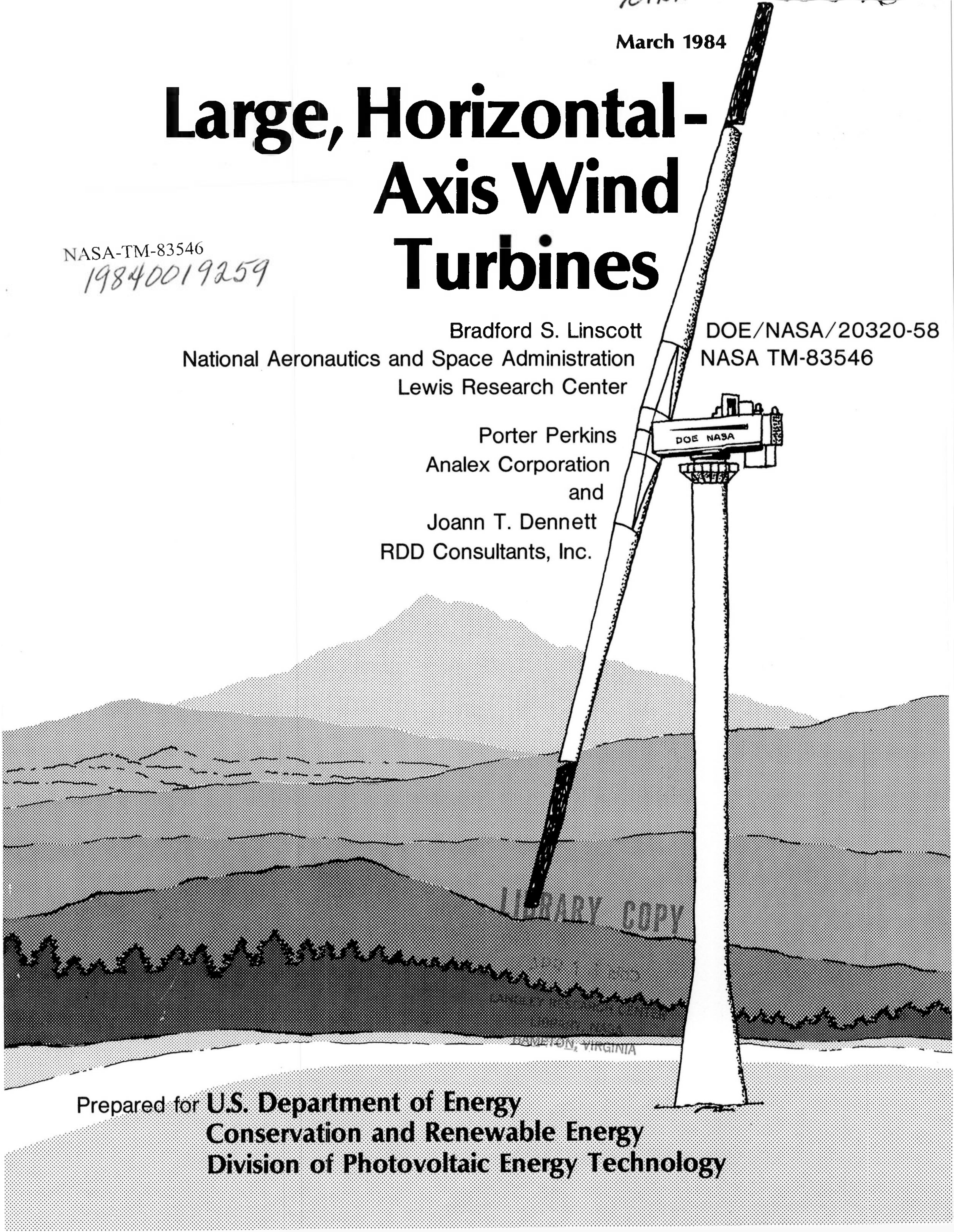

Prepared for **U.S. Department of Energy**
Conservation and Renewable Energy
Division of Photovoltaic Energy Technology

DOE/NASA/20320-58
NASA TM-83546

Large, Horizontal-Axis Wind Turbines

Bradford S. Linscott
National Aeronautics and Space Administration
Lewis Research Center
Cleveland, Ohio 44135

Porter Perkins
Analex Corporation
Lewis Research Center
Cleveland, Ohio 44135

and

Joann T. Dennett
RDD Consultants, Inc.
Boulder, Colorado

March 1984

Work performed for
U.S. DEPARTMENT OF ENERGY
Conservation and Solar Energy
Division of Photovoltaic Energy Technology
Washington, D.C. 20545
Under Interagency Agreement DE-AI01-76ET20320

N84-27327#

Printed in the United States of America

Available from
National Technical Information Service
U.S. Department of Commerce
5285 Port Royal Road
Springfield, VA 22161

NTIS price codes[1]
Printed copy: A04
Microfiche copy: A01

---

[1] Codes are used for pricing all publications. The code is determined by the number of pages in the publication. Information pertaining to the pricing codes can be found in the current issues of the following publications, which are generally available in most libraries: *Energy Research Abstracts (ERA); Government Reports Announcements* and Index (*GRA* and I); *Scientific and Technical Abstract Reports (STAR);* and publication, NTIS-PR-360 available from NTIS at the above address.

Contents

Summary

Large, Horizontal-Axis Wind Turbines

In 1973, the National Science Foundation (NSF) and the NASA Lewis Research Center began a joint effort to define objectives for and to initiate a wind energy development program. The early objectives were (1) to identify cost-effective wind turbine configurations, (2) to develop the technology to support complete wind turbine system design, (3) to transfer the research and technology from the Government to the commercial sector, and (4) to assure that utility companies can accept and use wind energy.

Mod-0. – Efforts were begun in 1973 to meet these objectives. First, it was decided to design, fabricate, assemble, and install a wind turbine research facility at Lewis with which to conduct experimental investigations. The wind turbine had to be large enough so that the technology and engineering problems associated with large horizontal-axis machines could be assessed but small enough to stay within a modest budget. As a result, Lewis designed, assembled, installed, and started experimental operation of the wind turbine research facility in September 1975 (ref. 1). The wind turbine, called Mod-0, was located near Sandusky, Ohio, at the NASA Lewis Plum Brook Station, and was originally designed to produce 100 kW of power in an 8-m/s (18-mph) wind (fig. 1). The Mod-0 was configured with a 38.1-m (125-ft) diameter downwind rotor mounted on top of a 28.3-m (93-ft) high, rigid truss tower. The rotor, operating at 40 rpm, provided power to a 60-Hz synchronous alternator through a 45:1 speed increaser gearbox, thereby turning the alternator at 1800 rpm. This research facility, consisting of the Mod-0 wind turbine and the control and research data systems, provided an early opportunity to assess large wind turbine performance and to evaluate advanced wind turbine concepts.

In addition to the effort to develop the Mod-0 research facility, it was decided to begin engineering and economic studies to identify the most cost-effective large, horizontal-axis wind turbine configurations. Through competitive bidding the Kaman Aerospace Corporation and the General Electric Company were selected by NASA in 1974 to each conduct an independent study on the design of wind turbines. Rated power levels of 50 to 3000 kW were considered appropriate for electric utility applications. The principal objective of each study was to evaluate the economic incentive for using large wind turbines to produce electricity for existing electric utility companies. There were four important findings as a result of these studies: First, the average wind speed of the site selected for wind turbines has a major effect on wind turbine economics. Second, large wind turbines, rated at 1500 to 2000 kW, will produce electricity more economically than wind turbines rated at 100 to 500 kW. Third, the wind turbine rotor is the largest single contributor to the overall wind turbine cost. And finally, no major technical difficulties are involved in linking a wind turbine generator to an electric utility network. Both of these studies were completed in late 1975 and the study results were published (refs. 2 and 3). These findings together with the installation of the Mod-0 facility set the stage for the future development of three generations of increasingly more advanced and more cost-effective large, horizontal-axis experimental wind turbines.

Mod-0A. – The Federal Wind Energy Program, managed by the National Science Foundation, was transferred in January 1975 to the newly formed Energy Research and Development Administration (ERDA). One of ERDA's first actions was to authorize the Mod-0A wind turbine project in January 1975 (refs. 4 to 6). NASA Lewis was requested by ERDA to design, install, and test two Mod-0A's, each an uprated version of the Mod-0 wind turbine. This first-generation machine was to produce 200 kW of power in a 9.8-m/s (22-mph) wind. The Mod-0A configuration was outwardly identical in appearance to the Mod-0; however, certain components used in the Mod-0 machine had to be uprated for the Mod-0A machine. For example, the aluminum rotor blades designed for Mod-0 were strengthened for the Mod-0A to help produce the higher power rating (ref. 7). In addition, modifications to the Mod-0 gearbox were incorporated to allow the Mod-0A machine to produce twice as much power as the Mod-0. An alternator, rated at 200 kW, was also installed on the Mod-0A machine. One of the primary objectives of the Mod-0A project was to assess these machines to assure that they could operate successfully on a utility company network. The first Mod-0A wind turbine was installed at Clayton, New Mexico, and experimental tests begun in November 1977 (fig. 2).

Figure 1. – Mod-0 as first configured in September 1975.

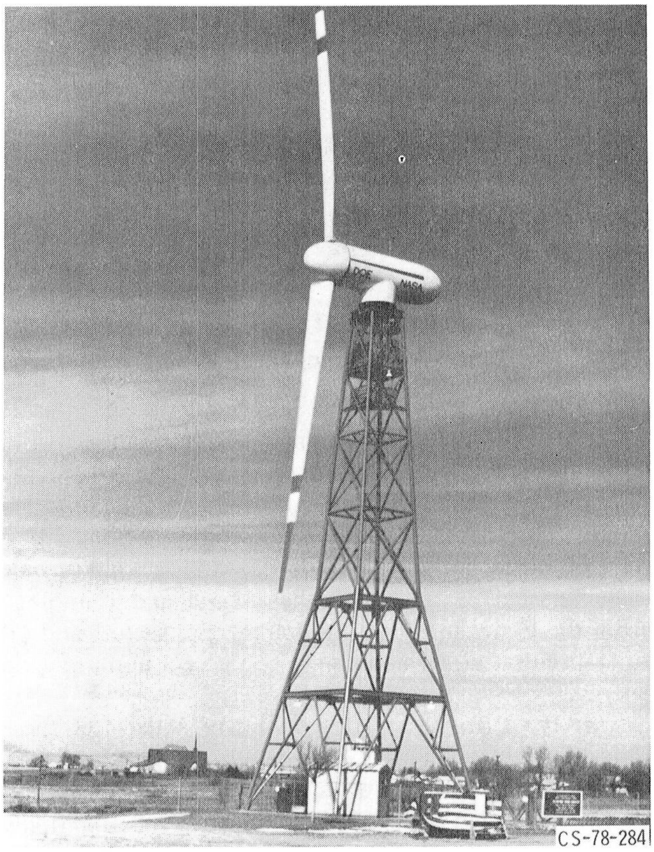

Figure 2. – Mod-0A, 200-kW wind turbine at Clayton, New Mexico.

Technology transfer: Federally sponsored wind turbine technology was transferred to industry mainly in two ways. First, a series of workshops and conferences were held on wind energy. Second, technical reports were published to disseminate the results of Federally funded efforts and applied experimental and analytical wind turbine research. The first NSF/NASA/utility conference was held in December 1974 at Lewis. This conference served to inform industry about the Federal Wind Energy Program and NASA energy projects in particular. At this conference, the first of a series of technical conferences, attending utility company representatives were asked to indicate their interest in operating and evaluating an experimental wind turbine on their networks. NSF received a very favorable response from the utility representatives who attended this conference.

The technical reports referenced herein represent a small percentage of the Federally funded reports published on wind energy. A bibliography of conferences is given at the end of this report. Proceedings were published for most of the conferences listed. The bibliography does not list the many other conferences where papers on the large wind turbine projects have been presented and published. Conference sponsors included the American Society of Mechanical Engineers, the Electric Power Research Institute, the American Solar Energy Society, and the American Gas Association–Gas Research Institute, to name only a few.

Early site selection: In May 1974, an invitation to participate in the Federal Wind Energy Program was sent by NSF to over 2700 utility organizations. The organizations that were contacted included rural cooperatives and investor-owned, public-owned, and Federal utilities. As a result of the Government/utility interaction during 1974 and early 1975, ERDA issued a formal request for wind turbine site proposals in December 1975. The request was sent to all of the utilities listed in the Electrical World Directory (ref. 8). In April 1976, ERDA received proposals from 61 utility organizations. Each of the 61 organizations proposed a site for the installation and field testing of large experimental wind turbines. In June 1976, ERDA selected 17 of the 61 proposed sites for further evaluation.

NASA Lewis was asked to manage the installation of meteorological instruments and the gathering and analysis of wind data for each site. By July 1977 wind data were being gathered at all 17 sites (table I). The information from each site was used by ERDA to assist them in selecting the sites for the installation of experimental wind turbines.

Mod-1. – Specifications for the first megawatt-size machine, in addition to those for the intermediate Mod-

TABLE I. - PERTINENT INFORMATION ABOUT THE 17 CANDIDATE SITES

Site	Utility	Instrument levels		Start of measurements
		m	ft	
Amarillo, Tex.	Southwestern Public Service	9.1, 45.7	29.8, 149.8	March 1977
Augspurger Mt., Wash.	Bonneville Power Administration			December 1976[a]
Block Island, R.I.	Block Island Power Company	9.1, 45.7	29.8, 149.8	December 1976
Boone, N.C.	Blue Ridge Electric Corporation	18.2, 45.7	59.7, 149.8	December 1976
Clayton, N.Mex.	City of Clayton	9.1, 45.7	29.8, 149.8	May 1977
Cold Bay, Ala.	Alaska Bussell Electric Company	9.1, 21.8[b]	29.8, 71.5	August 1977
Culebra, P.R.	Puerto Rico Water Resources Authority	9.1, 45.7	29.8, 149.8	March 1977
Holyoke, Mass.	Holyoke Gas and Electric Corporation	18.2, 45.7	59.7, 149.8	December 1976
Huron, S.Dak.	East River Electric Power Cooperative, Inc.	9.1, 45.7	29.8, 149.8	December 1976
Kingsley Dam, Nebr.	Central Nebraska Public Power and Irrigation District	9.1, 45.7	29.8, 149.8	December 1976
Ludington, Mich.	Consumers Power Company	18.2, 45.7	59.7, 149.8	April 1977
Montauk, Long Island, N.Y.	Long Island Lighting Company	18.2, 45.7	59.7, 149.8	January 1977
Point Arena, Calif.	Pacific Gas and Electric Company	9.1, 45.7	29.8, 149.8	January 1977
Russell, Kans.	City of Russell	9.1, 45.7	29.8, 149.8	December 1976
San Gorgonio Pass, Calif.	Southern California Edison	9.1, 45.7	29.8, 149.8	December 1976
Boardman, Oreg.	Portland General Electric	9.1, 39.6, 70.1	29.8, 129.8, 229.8	January 1977[d]
Oahu, Hawaii	Hawaiian Electric Company	9.1, 45.7[c]	29.8, 149.8	December 1976

[a] Measurements terminated in January 1978.
[b] Tower supplied by utility.
[c] Meteorological equipment and data reports supplied by utility.
[d] Data collected by utility since 1974.

0A wind turbine, were being formulated by NASA in 1975 as a part of the Federal Wind Energy Program. In March 1976, NASA submitted to industry a request for proposals to design, install, and test a 1500-kW (1.5-MW) wind turbine. As a result of a competitive selection, in July 1976 the General Electric Company (GE) was awarded a contract to design the Mod-1 wind turbine. During the design phase, GE and NASA determined that the machine would produce electricity more economically if the rating were increased from 1500 to 2000 kW. The Mod-1, a 2000-kW machine, was installed at Boone, North Carolina, and started experimental operation in May 1979 (fig. 3; ref. 9). This machine exceeded the size and rated power of the Smith-Putnam machine, which first operated in October 1941 (fig. 4).

Mod-2. – Specifications for a second megawatt-size machine were being developed by NASA for ERDA in 1976. By February 1977, NASA had requested proposals from industry to design, install, and conduct experimental tests on a multimegawatt wind turbine system. The Boeing Engineering and Construction Company was competitively selected to carry out this megawatt wind turbine system development project, called Mod-2. The key goals established for the Mod-2 project were (1) to provide an economical, viable alternative electrical

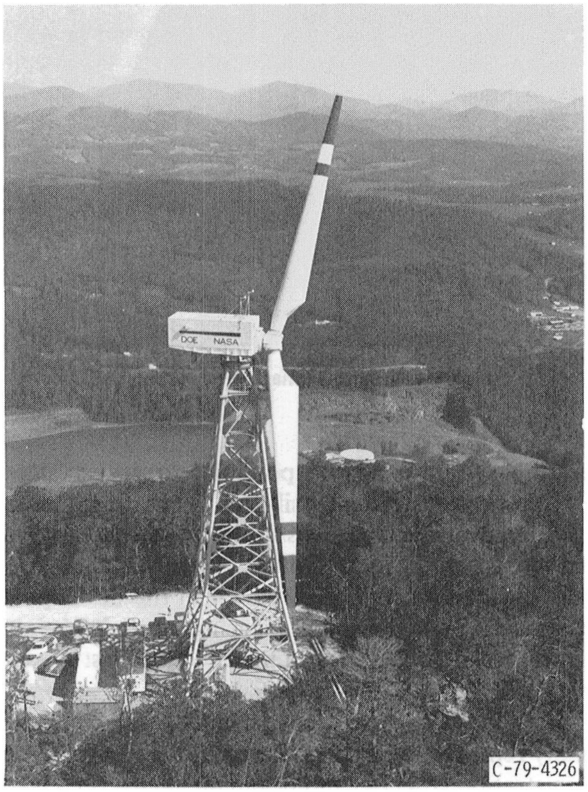

Figure 3. – Mod-1, 2-MW wind turbine at Boone, North Carolina.

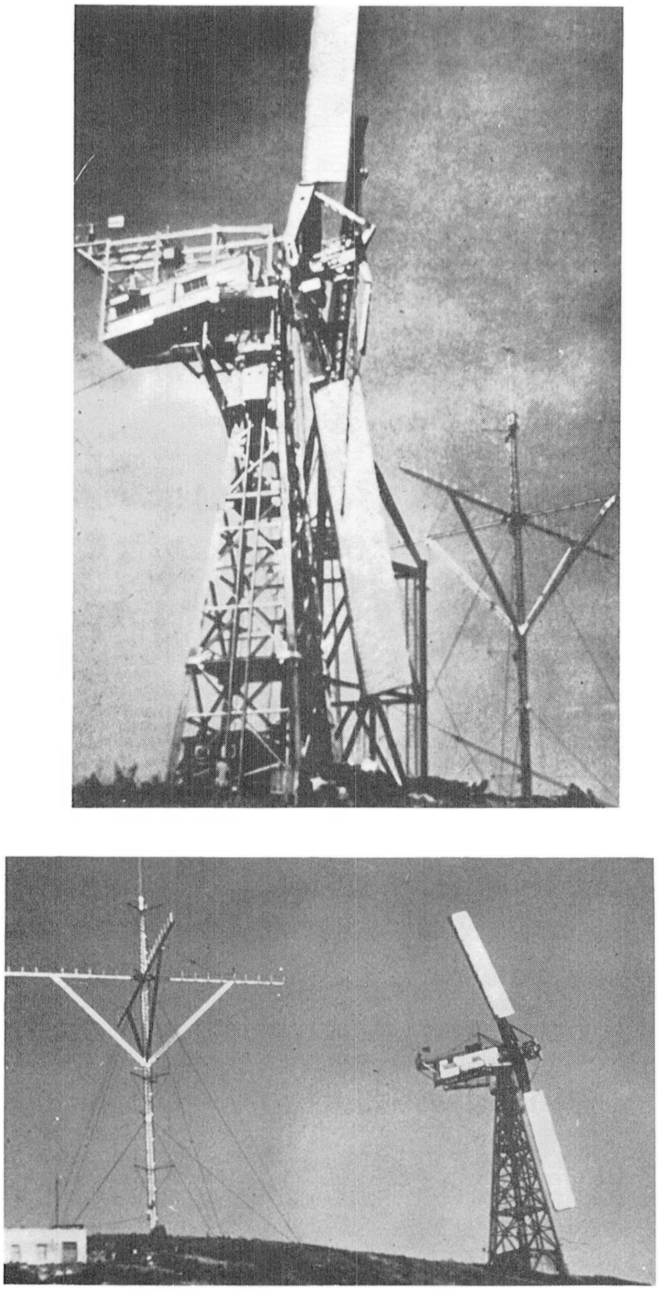

Figure 4. – Smith-Putnam wind turbine.

generating system with the potential to reduce dependency on nonrenewable-fossil-fuel generating systems, (2) to demonstrate the feasibility of megawatt wind turbines operating in a utility network, and (3) to stimulate wide industry involvement in the development of commercial wind turbines. Boeing started the initial design effort in July 1977 and installed the first machine in mid-1980 (fig. 5).

In October 1977, the Department of Energy (DOE) formally replaced the Energy Research and Development Administration (ERDA) and began managing the Federal Wind Energy Program.

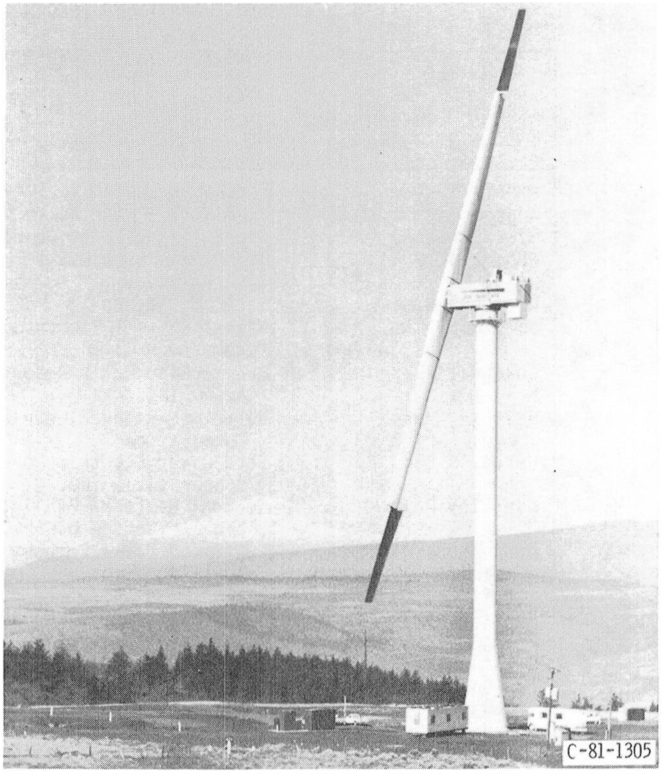

Figure 5. – Mod-2, 2.5-MW wind turbine at Goodnoe Hills, Washington.

The Mod-0A and the Mod-1 experimental machines are classified as the first of three generations of steadily advancing configurations. The Mod-1 can be thought of as a scaled-up version of the first-generation (Mod-0A) machine. For example, each first-generation machine used a very stiff truss type of tower structure. The rotor of each machine operated on the downwind side of the tower. To control rotor speed and power, each blade rotated about the spanwise, or pitch, axis. Blade pitch was actuated by a mechanism at the hub of the machine. Each blade was rigidly attached to the hub and the horizontal-axis drivetrain.

During the Mod-1 design effort, General Electric engineers under NASA contract conducted a special conceptual design study. NASA requested GE to define innovative ways, through design, to reduce the weight and cost of a megawatt machine and at the same time to increase the rated power. The results of this study (ref. 9) indicated that a rotor that is hinged at the hub with pitchable blade-tip control surfaces could result in significant system weight and cost savings. The GE study also recommended that the rotor operate upwind of the tower, thereby reducing the adverse aerodynamic effects associated with operating the rotor downwind of the tower. The GE designers concluded that the tower weight could be safely reduced by decreasing the tower stiffness.

As a result of this conceptual study two important courses of action were taken in early 1978. First, it was decided to modify the Mod-0 research machine. Changes planned for the machine included the use of a hinged (or teetered) rotor, pitchable blade-tip control surfaces, and modification of the tower so that its stiffness could be easily changed. Once these modifications to Mod-0 were incorporated, experiments could be conducted to evaluate the performance of this second-generation wind turbine configuration proposed by the GE designers. The second course of action involved the development of Mod-2, which had started in late July 1977. The Department of Energy (DOE), NASA, and the Boeing Mod-2 designers decided to incorporate these new design concepts into the final Mod-2 configuration. As a result, Mod-2 was developed as the second-generation megawatt-size machine beyond the Mod-1 (ref. 10).

In October 1978, with the configuration shown in figure 6, a series of Mod-0 experiments began with the objective of evaluating the innovative concepts planned for the second-generation (Mod-2) machines. The first of this series of Mod-0 experiments investigated the effects of varying the tower bending stiffness on rotor performance. The tower tests were conducted and the experimental data were analyzed. It was found that the Mod-0 operated smoothly with a tower having either stiff

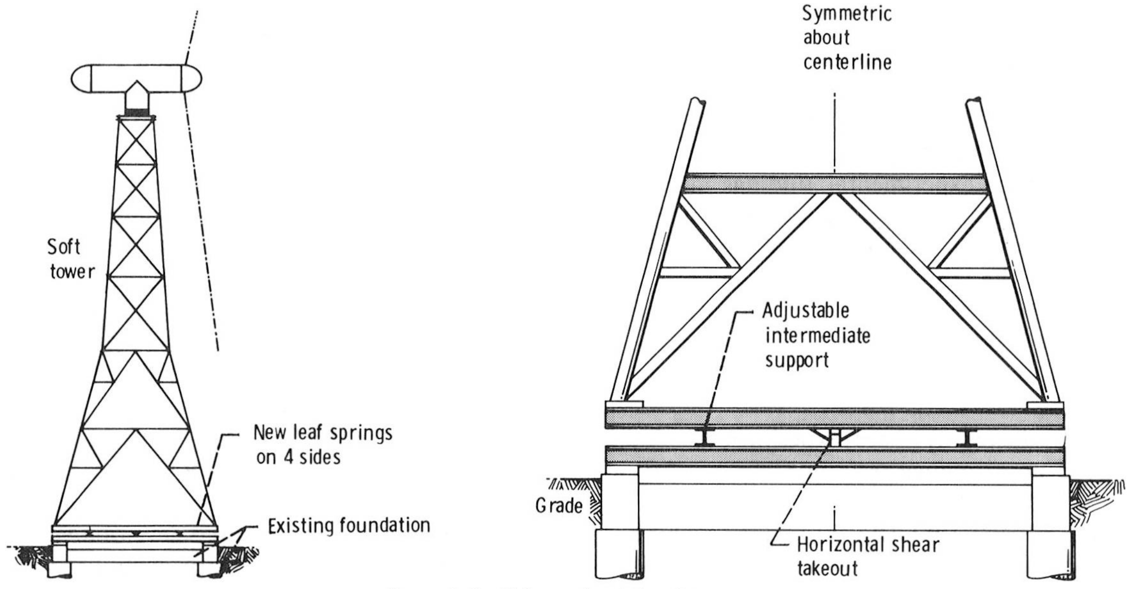

Concept of soft-tower simulation fixture

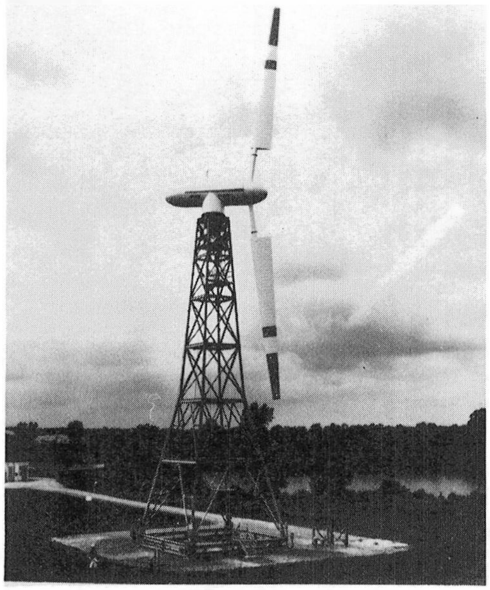

Figure 6. – Mod-0 tower configured to simulate the Mod-2 wind turbine.

or soft bending qualities. No significant changes in rotor performance were found, and the tower bending oscillations were nominal and in agreement with the designers' predictions. It was therefore concluded that a second-generation wind turbine tower structure could be constructed that was lighter and had a lower bending stiffness than the first-generation towers. And, better yet, the weight savings had the potential of reducing the machine cost with no compromise in energy production.

In May 1979, the planned Mod-0 test series continued with the first experimental operation of a teetered rotor with movable blade-tip control surfaces. These experiments proved that rotor startup, shutdown, and normal running could be successfully commanded with rotor blade-tip control surfaces.

Teetered and rigid rotor operating loads were compared. As the designers predicted, the teetered-rotor operating loads were significantly less than the first-generation rigid-rotor operating loads.

As a result of these experimental findings and their close agreement with analytical predictions, in June 1979, DOE authorized NASA to have Boeing start fabrication and assembly of the three Mod-2 machines. The information from Mod-0 provided designers with high confidence that the Mod-2 machines would provide more power than Mod-1 at a lower cost and with less equipment and materials.

The first of a cluster of three experimental Mod-2 machines started performance tests in October 1980 at Goodnoe Hills, Washington. Experiments with all three machines began in May 1981 (fig. 7). Each machine is rated at 2.5 MW of power in a 9.8-m/s (22-mph) wind. These experimental machines are currently providing power for the Bonneville Power Administration while undergoing a series of planned research experiments (refs. 11 and 12).

Mod-5. – During 1979, NASA developed, under the direction of DOE, specifications for an advanced multimegawatt, or third-generation, wind turbine. In August 1979, NASA requested industry, on a competitive basis, to submit proposals to design, fabricate, assemble, install, and conduct experiments on this third-generation machine. System analyses of large, horizontal-axis wind turbines showed that a cost of energy (COE) lower than the Mod-2 COE could be realized if an advanced multimegawatt wind turbine, called Mod-5, was developed. To meet the lower COE objective, Mod-5 would have to be larger than Mod-2 and use advanced technology developed as a result of the Federal Wind Energy Program. A key objective of the Mod-5 project is to develop and verify the technology required for an advanced multimegawatt machine to generate electricity for 3.75 ¢/kWh, or less, in 1980 dollars.

In 1980, DOE authorized parallel design contracts to GE and Boeing for conceptual designs. Conceptual design was completed by both contractors in March 1981. In-depth design reviews were conducted by NASA. A NASA assessment was provided to DOE in May 1981. Both designs met the project goals with significant margin. Subsequently both contractors' conceptual designs were approved by DOE and permission was granted to proceed with preliminary design.

The concept designs required development of advanced technology in several areas: for example, variable-speed

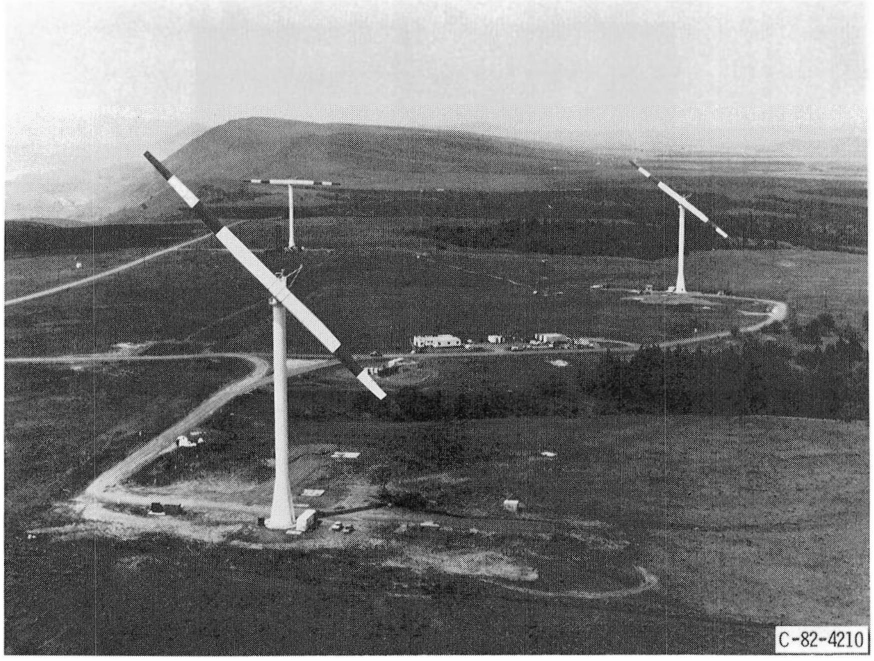

Figure 7. – Mod-2 wind turbine cluster at Goodnoe Hills, Washington.

rotors, laminated-wood–epoxy composite blade materials, a rotor-integrated gearbox, and a variable-speed generator-cycloconverter system. Also, each contractor was asked to propose completion of the project on a cost-sharing basis, where the Government would fund the remaining design and development and the contractors or their utility customers would provide funds for the fabrication, erection, and operation of the wind turbines. The wind turbines would be owned solely by the contractors or customers, and the Government would receive semiannual performance data and operations reports for 3 years after initial operations.

In June 1983, General Electric signed a contract with the Hawaiian Electric Company (HECO) whereby HECO would purchase from GE one prototype Mod-5A wind turbine to be installed at the Kahuku Hills site. The Mod-5A first rotation and synchronization on the utility network were planned for late 1985.

In December of 1983, the General Electric Company announced their decision to withdraw from the Mod-5A project, GE citied the poor near-term prospect of obtaining additional wind turbine sales and the expected expiration of energy tax credits as factors that would make further private sector investment inappropriate at this time. The Government will conclude its contract with General Electric over an approximate 12-month period. During this time a comprehensive final report will be prepared to document the design, the research performed during the contract effort, and test results.

A revised cost-sharing proposal reflecting their replanned program was received from Boeing in March 1984. Figure 8 shows how the Mod-5 machine compares with the other machines in size, and table II presents a summary of data for each machine.

System verification unit (SVU). – The Bureau of Reclamation, an organizational element of the Department of Interior, determined that wind energy has the potential to conserve water flow through their hydroelectric turbines. In the late 1970's, the Bureau of Reclamation began planning to conduct experimental tests of megawatt wind turbines connected to its hydroelectric utility network. A site near Medicine Bow, Wyoming, was selected and industry was requested to submit proposals to design, fabricate, and install two large wind turbines at this site. NASA Lewis was asked to provide technical assistance to Bureau of Reclamation personnel during their wind turbine development project and early experimental testing.

As a result of a competitive selection conducted by NASA and the Bureau of Reclamation, a team consisting of Hamilton Standard Division of United Technologies Corporation and the Swedish Karlskronavarvet (KKRV) Company was selected to design, fabricate, install, and test a wind turbine rated at 4 MW. Using company funds together with Government funds, this American and Swedish team has successfully installed the WTS–4 System Verification Unit (SVU) near Medicine Bow. Experimental tests were begun in September 1982.

The WTS–4 (fig. 9), has a two-blade, 78.1-m (256.4-ft) diameter rotor. The rotor operates downwind of a tubular tower. The machine produces 4 MW of power at a wind velocity of 15.1 m/s (33.9 mph) measured at a height of 80 m (262 ft), the hub height above the ground line.

In addition to the WTS–4, the Bureau of Reclamation provided funding and requested NASA Lewis to provide contract and technical management for the installation and testing of a Boeing Mod-2 wind turbine. Boeing

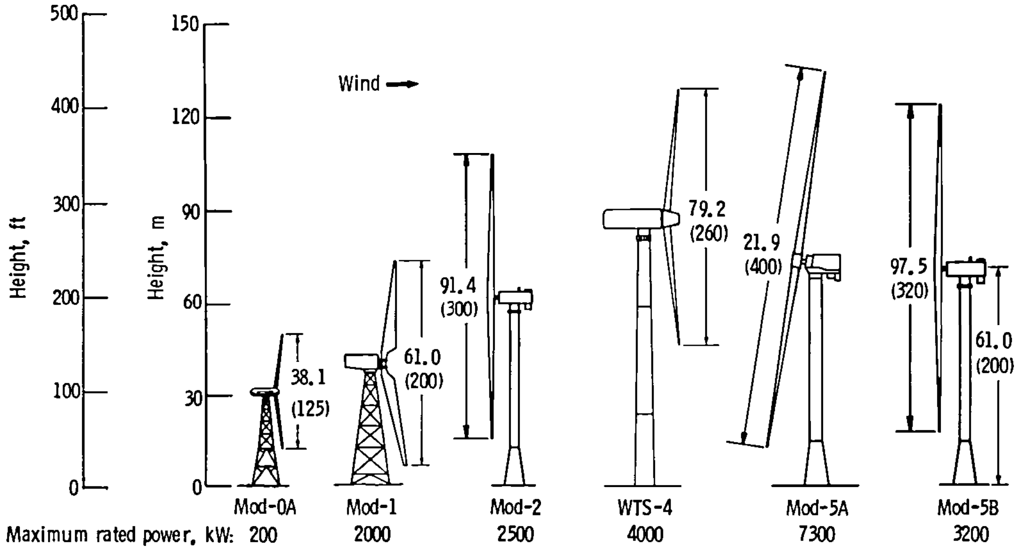

Figure 8. – Size comparison of large, horizontal-axis wind turbines. (Dimensions are in meters (feet).)

TABLE II. - DATA FOR INTERMEDIATE AND LARGE HORIZONTAL-AXIS WIND TURBINES

	Mod-0A	Mod-1	Mod-2	Mod-5A	Mod-5B	SVU WTS-4
Prime contractor	Westinghouse Electric Corp., Pittsburgh, Pa.	General Electric Co., Philadelphia, Pa.	Boeing Aerospace Co., Seattle, Wash.	General Electric Co., Philadelphia, Pa.	Boeing Aerospace Co., Seattle, Wash.	Hamilton Standard Div., United Technologies Corp., Windsor Locks, Conn.
Location	Clayton, N.Mex. Culebra, P.R. Block Island, R.I. Oahu, Hawaii	Boone, N.C.	Goodnoe Hills Wash. (3) Medicine Bow, Wyo. (1)	Project terminated 12-83	Oahu, Hawaii	Medicine Bow, Wyo.
Date of first rotation (location and unit)	11-77 (N.Mex.) 6-78 (P.R.) 5-79 (R.I.) 5-80 (Hawaii)	5-79 (N.C.)	11-80 (Wash. 1) 3-81 (Wash. 2) 5-81 (Wash. 3) 12-81 (Wyo.-SVU)		(a)	8-82
Center of blade rotation (hub height), m (ft)	30.5 (100)	42.7 (140)	61.0 (200)	76.2 (250)	61.0 (200)	79.9 (262)
Rotor blade diameter, m (ft)	38.1 (125)	61.0 (200)	91.5 (300)	122 (400)	97.6 (320)	78.1 (256)
Rated power, kW	200	2000	2500	7300	3200	4000
Rated wind speed at hub height, m/s (mph)	9.8 (22)	14.8 (33)	12.5 (28)	14.3 (32)	11.6 (26)	14.8 (33)
Annual electricity output,[b] MWh:						
At 5.4-m/s (12-mph) site	640	2400	7000	13 200	8200	7000
At 6.3-m/s (14-mph) site	820	3700	9300	20 600	12 000	9900
At 7.2-m/s (16-mph) site	980	5100	11 300	30 700	17 900	13 000
Cut-in speed at hub height, m/s (mph)	5.4 (12)	7.2 (16)	6.3 (14)	6.3 (14)	4.9 (11)	6.7 (15)
Cutout speed at hub height, m/s (mph)	17.9 (40)	15.7 (35)	20.1 (45)	26.8 (60)	26.8 (60)	24.6 (55)
Weight on foundation, kg (lb)	40.6×10^3 (89.5×10^3)	295×10^3 (650×10^3)	281×10^3 (619×10^3)	769×10^3 (1695×10^3)	413×10^3 (910×10^3)	353×10^3 (778×10^3)
Weight per rated power, kg/kW (lb/kW)	203 (447)	147 (325)	112 (247)	105 (232)	129 (284)	88 (194)

---

[a] Fourth quarter of calendar year 1985.

[b] 90 Percent of available wind energy measured at 9.1 m (30 ft) above sea level; Weibull distribution.

Figure 9. – Bureau of Reclamation/Hamilton Standard WTS-4, 4-MW wind turbine near Medicine Bow, Wyoming.

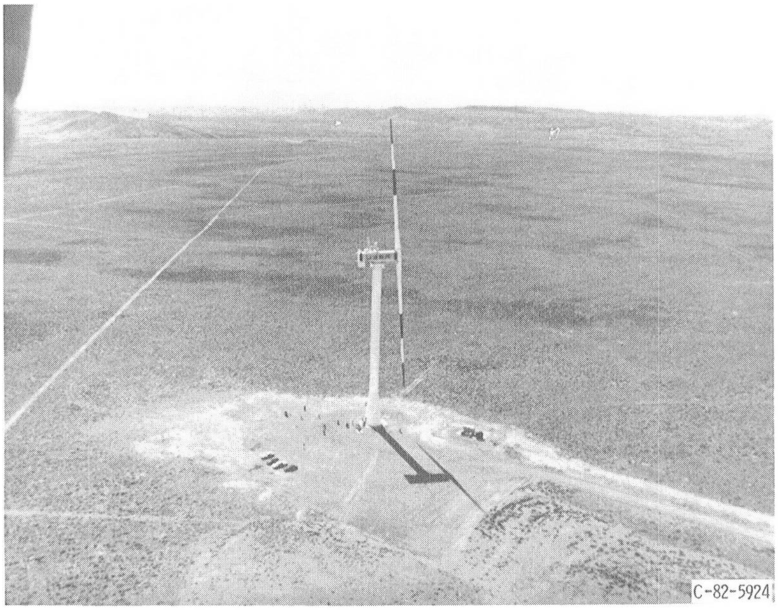

Figure 10. – Bureau of Reclamation Mod-2, 2.5-MW wind turbine near Medicine Bow, Wyoming.

completed the installation of the Mod-2 SVU wind turbine (fig. 10) at the test site in December 1981. Operational checkout was completed and experimental tests were begun in September 1982.

The Bureau of Reclamation is currently evaluating the technical and economic feasibility as well as the environmental acceptability of the SVU's. This early effort may result in the placement of many more wind turbines, which will be used to supplement the electricity now being generated by hydroelectric plants.

Other Wind Turbines

Although much of the Federal support for wind energy has centered on the development of large, horizontal-axis wind turbines, a variety of other wind energy projects have been under way. Those wind energy projects that have received attention in the overall development effort include vertical-axis wind turbines, small wind turbines, innovative wind turbines, and wind characteristics research.

Vertical-axis wind turbines. – Vertical-axis wind turbines (VAWT) have some advantages over the horizontal-axis types. The VAWT does not have to turn to face into the wind, and this eliminates a mechanical system needed for rotating the horizontal-axis machines into position. Also, because the drivetrain and generator can be mounted near the ground, there is no need for a high tower. However, the horizontal-axis machines presently have higher tip- to wind-speed ratios than the VAWT and thus produce more power. But improvements on the vertical-axis design may remove this disadvantage.

A vertical-axis wind turbine that has been given considerable attention is the Darrieus type of rotor invented by G.J.M. Darrieus of France (fig. 11). It is characterized by curved blades with airfoil cross sections arranged in a form resembling a huge eggbeater. These blades have a relatively low starting torque but rotate at rather high speeds once they are started by some auxiliary method.

Research to improve the Darrieus machine has been conducted by Sandia National Laboratories for DOE (ref. 13). Aerodynamics and structural dynamics studies project significant improvements in its cost effectiveness. Four 100-kW experimental machines were fabricated by the Aluminum Company of America (ALCOA). Operational experience from these units has been obtained from installations at Rocky Flats, Colorado; Bushland, Texas; and Martha's Vineyard, Massachusetts.

Small wind turbines. – Small wind turbines, machines that develop less than 100 kW, have received considerable development effort under the Federal Wind Energy Program. More than 6 million small windmills have been built and used, mostly in rural areas, in the United States since the middle of the 19th century. However, most were removed when commercial electricity was provided by the Rural Electrification Program in the 1930's. The recent Federal Wind Energy Program has helped reactivate the once almost nonexistent wind turbine industry.

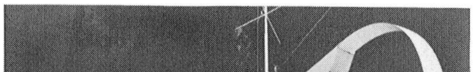

Figure 11. – Vertical-axis wind turbine.

A test center for small wind systems was established in 1976 by DOE at Rocky Flats, Colorado. The center, operated by Rockwell International Energy Systems Group, has tested and evaluated over 25 commercial wind machines. In addition, the Rocky Flats facility has supported the design, fabrication, and testing of new small wind turbine systems and is now providing research needed by the wind industry to develop small wind turbine systems that are reliable, safe, and economical (ref. 13). Several small machines now on the market are in part the result of the Rocky Flats program.

The small wind turbines advanced by the Federal Government include 1- to 2-kW, 4-kW, 8-kW, 15-kW, and 40-kW systems (fig. 12). The 1- to 2-kW size is suited to battery charging. Residential heating and cooling could use the 4- to 8-kW range depending on load requirements. A 15-kW machine has application in agricultural and small industrial needs, and a 40-kW machine will satisfy larger agricultural and industrial requirements.

Advanced, innovative wind turbines. – Motivation for innovative wind turbines is, in general, directed toward improving the cost effectiveness of converting the wind into useful energy. To achieve this, new concepts strive to have, among many, the following goals: high wind energy capture efficiency, wide wind speed operating range, high rotational speed, location of heavy components that require servicing near the ground, and the simplest possible operating controls. New ideas include wind-concentrating devices, augmentors for rotor blades, and systems with no moving parts.

More than 12 advanced and innovative wind energy concepts have been supported by DOE and managed by the Solar Energy Research Institute (SERI) located in Golden, Colorado. Also, approximately 20 studies have been funded in such areas as aerodynamics, thermodynamics, and theoretical concepts.

One innovative wind energy conversion system is the diffuser-augmented wind turbine shown in figure 13. This device uses a shroud around the outside of the turbine blade arc that expands or diffuses the airflow downstream of the blades. This expansion tends to pull more air into the upstream side of the blades, or in effect, concentrates the wind through the turbine. Greater flow through the blades can increase the turbine power output by at least a factor of 4 over that produced by a conventional turbine (ref. 13). The problem, however, is the added cost of the diffuser shroud and designing a large practical structure to support the diffuser shroud in high winds.

Another augmentation system for wind turbines is called a dynamic inducer, as shown in figure 14. This

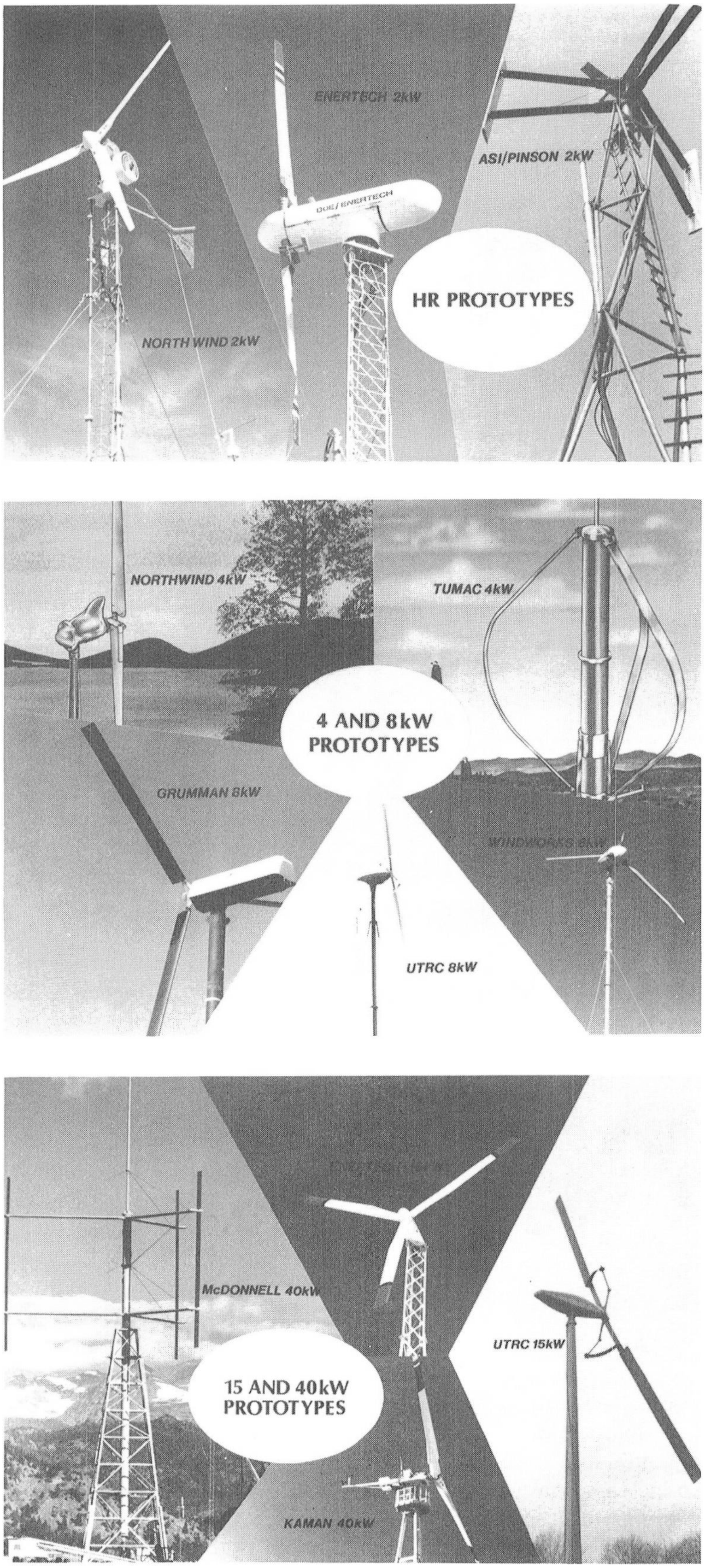

Figure 12. – Small wind turbines from Federal Wind Energy Program.

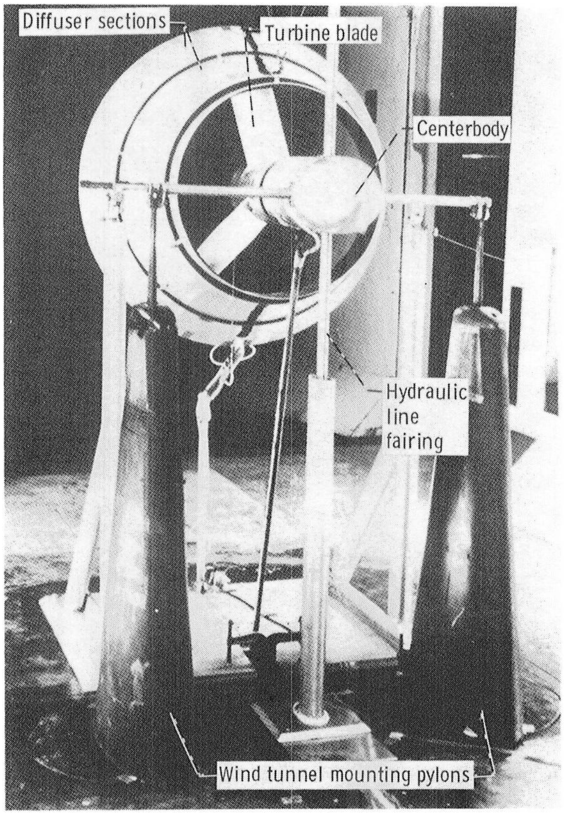

Figure 13. – Diffuser-augmented wind turbine baseline model with 46-cm (18-in.) diameter turbine mounted in the 2- by 3-m wind tunnel test section.

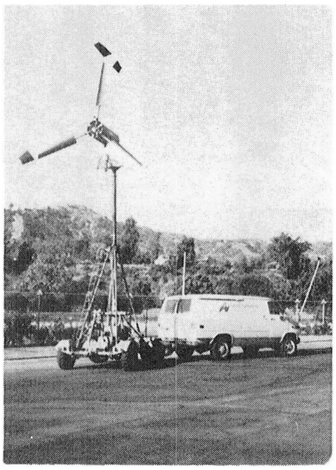

Figure 14. – Full-scale tow test of dynamic inducer.

system uses short airfoil sections, called tip vanes, which are attached approximately at right angles to the tips of the rotor blades of a horizontal-axis turbine. Theoretically, this innovation can increase power output by a factor of about 2.5. Wind tunnel tests have measured power output of a dynamic inducer 1.7 times that of the bare rotor blades (ref. 13).

A unique concept of deriving energy from the wind by using a system without any moving parts has been investigated. This conceivably would be simpler and less expensive to operate than conventional wind energy conversion systems. The system is called an electrofluid dynamic wind-driven generator. A model of this concept is shown in figure 15. Particles are mechanically produced and electrically charged upwind of an oriented array of electrodes charged at a higher voltage. These particles are driven by the wind through the array against the electrical potential. The transport of the charged particles to a higher electrical potential generates electricity. A theory that describes the performance of this advanced concept has been developed (ref. 13). The theory has been generally confirmed to be correct by wind tunnel experiments.

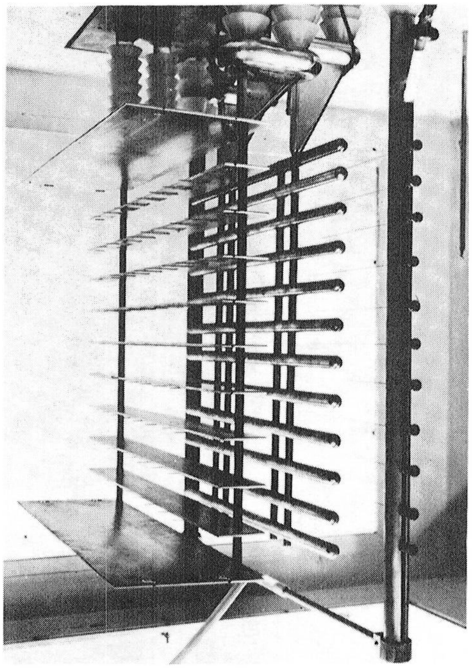

Figure 15. – Electrofluid dynamic wind-driven generator.

Wind characteristics research. – To harness the wind in a cost-effective manner, considerable study and research on the various characteristics of wind have been conducted over the past several years. This research has been carried out by the Pacific Northwest Laboratory, Richland, Washington, under the direction of DOE. Obviously, areas of high winds are desirable, but the nature of the wind in a given area is important also (e.g., the wind gustiness and variability over different periods of time). Major areas of wind research include

(1) Determining the magnitude and distribution of the wind resource over the United States
(2) Providing site selection techniques for small and large turbines
(3) Establishing the wind characteristics that can affect wind turbine performance and life
(4) Defining wind turbine operating strategy to maximize wind energy capture

A major part of the Wind Characteristics Program has been a national wind energy resource assessment. The results of this effort are available in the form of an atlas for each of 12 regions covering the United States and its territories (ref. 14). Of main interest in these atlases are the annual and seasonal maps of wind energy. In addition, the atlases contain tabular data and a description of the various features of the wind on a regional and state level.

One must be cautious in applying these published wind energy distributions. In many areas, the values are estimates and apply to locations exposed to the wind and not affected by the terrain and other wind obstructions. For lack of reliable measurements in a given area and complexity of the topography, the wind energy values are estimates. However, a degree of certainty is provided for the estimated values. Unfortunately, only a small fraction of the areas that have high estimates of wind energy also have high certainty.

Thus the large-scale wind resource information should be used only in the preliminary selection of a wind turbine site. A specific site should be selected on the basis of further measurements. Certain site selection techniques such as numerical modeling have also been developed and can be used to evaluate specific sites. Reference 15 describes the meteorological aspects of site selection.

Wind turbine design and performance can be affected by wind characteristics at a given site. Such characteristics as gusts and local turbulence create stress cycles that contribute to fatigue problems. Also, wind turbine operating efficiency can be improved by consideration of wind variability. The scheduling of servicing and preventive maintenance during periods of low winds is an example.

Large Experimental Wind Turbines

Mod-0

Mod-0, as originally designed and built by NASA Lewis, had a heavy (20 000 kg; 44 000 lb), 30.5-m (100-ft) high steel truss tower. The blades, rigidly attached to the hub, were downwind of the tower and the entire blade pitched against the wind. Mod-0 is used to develop and verify advanced wind turbine concepts. Thus the Mod-0 research machine has undergone frequent modifications since it was first erected at NASA's Plum Brook Station, near Sandusky, Ohio, in 1975 (fig. 16).

The Mod-0 two-blade rotor drives a synchronous generator through a step-up gearbox. The rotor was designed to operate at a constant speed of 40 rpm and drives a 125-kVA, 480-V, 60-Hz three-phase generator at 1800 rpm.

The Mod-0 blades were built by Lockheed Aircraft Corporation for NASA Lewis. The blades are much like aircraft wings (fig. 17). Each is 18 m (59.9 ft) long and weighs 907 kg (2000 lb). The blade pitch is changed to control rotor rotational speed or power. The gearbox steps up the rotational speed of the rotor and low-speed drivetrain to the generator speed.

The Mod-0 rotor hub containing the blade pitch change mechanism, the generator, the gearbox, the low- and high-speed drivetrains, and the associated mechanical and electrical equipment are mounted to a bedplate structure. All of this is enclosed by a fiberglass shell called the nacelle. The nacelle with all of the enclosed equipment can be yawed in a horizontal plane about the tower to align the rotor with the wind. Rotor power is controlled by hydraulic actuators, which change the blade pitch. The yaw control keeps the rotor facing toward the wind; however, it does not respond to every gust. It is programmed to face in the general prevailing wind direction. Power, instrumentation, and control connections are made to the ground through sliprings.

Originally the Mod-0 was designed for operation in 8-m/s (18-mph) winds, but it can produce power in winds ranging from 4.2 to 17.9 m/s (9.5 to 40 mph). The turbine can begin to generate power in winds as low as 4.2 m/s (9.5 mph) and reaches its 100-kW output at the design speed of 8 m/s (18 mph). Above this wind speed the wind turbine continues to generate 100 kW by adjusting the pitch of the rotor blades to spill excess energy. The maximum wind speed at which Mod-0 will operate is determined by the structural limits of the rotor. Accordingly, at wind speeds above this maximum (approx 17.9 m/s; 40 mph) the generator is disconnected from the power network, the blades are feathered to bring the rotor to a halt, and the machine is shut down. A similar shutdown occurs at wind speeds below 3.6 m/s (8 mph). This feature prevents the wind turbine from drawing utility power to maintain rotor speed.

If the wind turbine is shut down by unacceptable winds, it will restart automatically when the wind speed returns to acceptable levels. However, startup will not occur before the wind reaches 5.8 m/s (13 mph) in contrast to the shutdown, which occurs at 3.6 m/s (8 mph). This slightly wider bottom wind speed range reduces the number of startup-shutdown cycles in light, variable winds. Similarly, shutdown is begun when the winds exceed 17.9 m/s (40 mph) and the wind turbine is not restarted until the winds drop below 11.1 m/s (25 mph). This again reduces unnecessary cycling in variable winds.

Experience was gained with the downwind rotor configuration of Mod-0 during experimental operation. At Plum Brook, NASA Lewis engineers moved the Mod-0 successfully through each of three design operating modes. Initial manual operation fed the electricity produced by Mod-0 into a device that simply consumed it. This manual operation on a resistive load simulated actual operating conditions. Once successfully

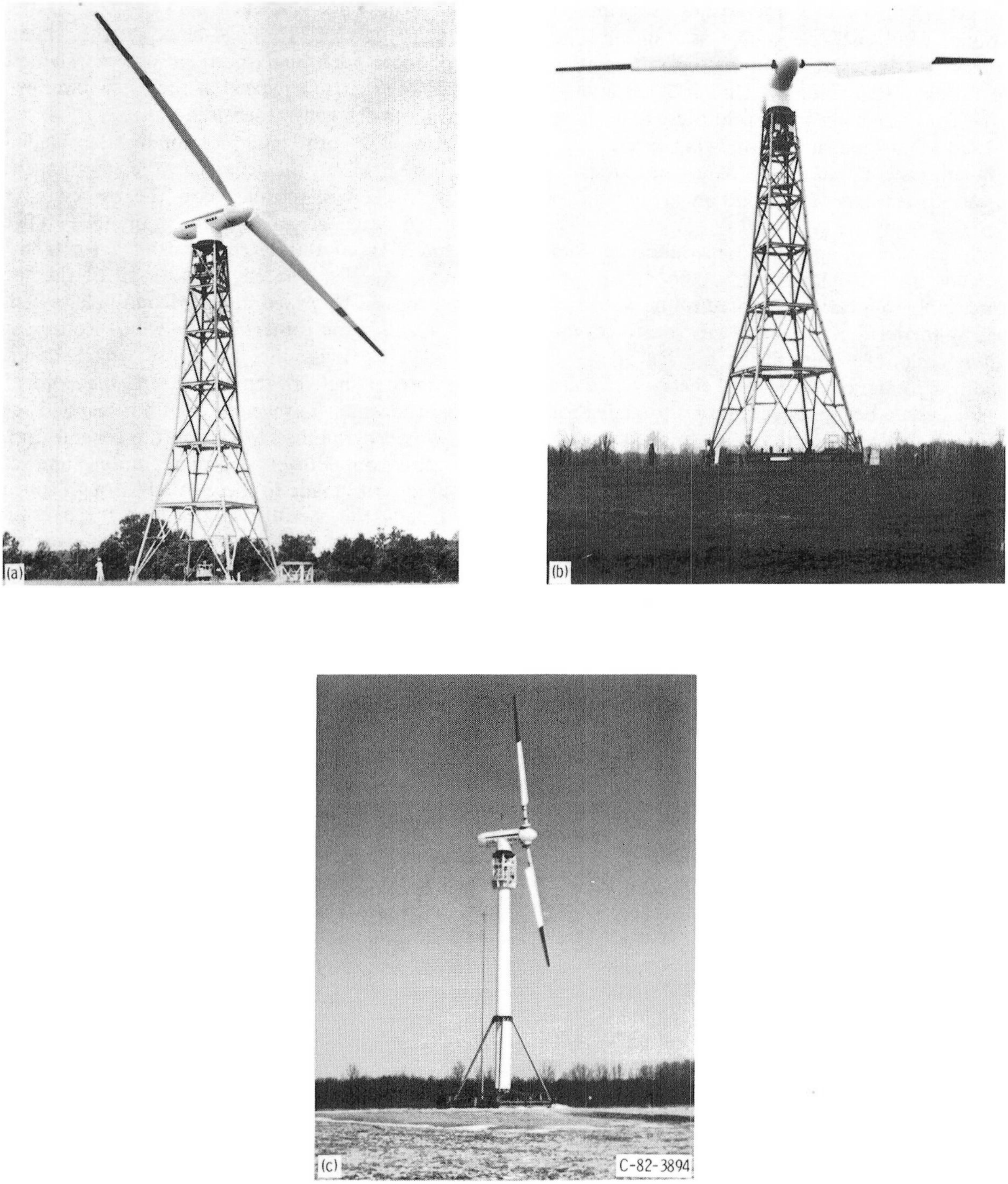

(a) First generation (1975).
(b) Second generation (1979).
(c) Advanced configuration (1983).
Figure 16. – Mod-0 experimental test configurations.

past these first tests, Mod-0 was then synchronized with the Ohio Edison power grid. The final operating mode was unattended automatic synchronization and operation on this power grid.

The Mod-0 tower is located upwind of the rotor. Thus each blade rotates into the lee or shadow of the tower once per revolution. As this tower shadow changes, the wind load on the blades changes and subjects the blades to regular, recurring stresses. When Mod-0 first began operation in December 1975, the measured blade loads were higher than predicted. This would have shortened the blade life substantially.

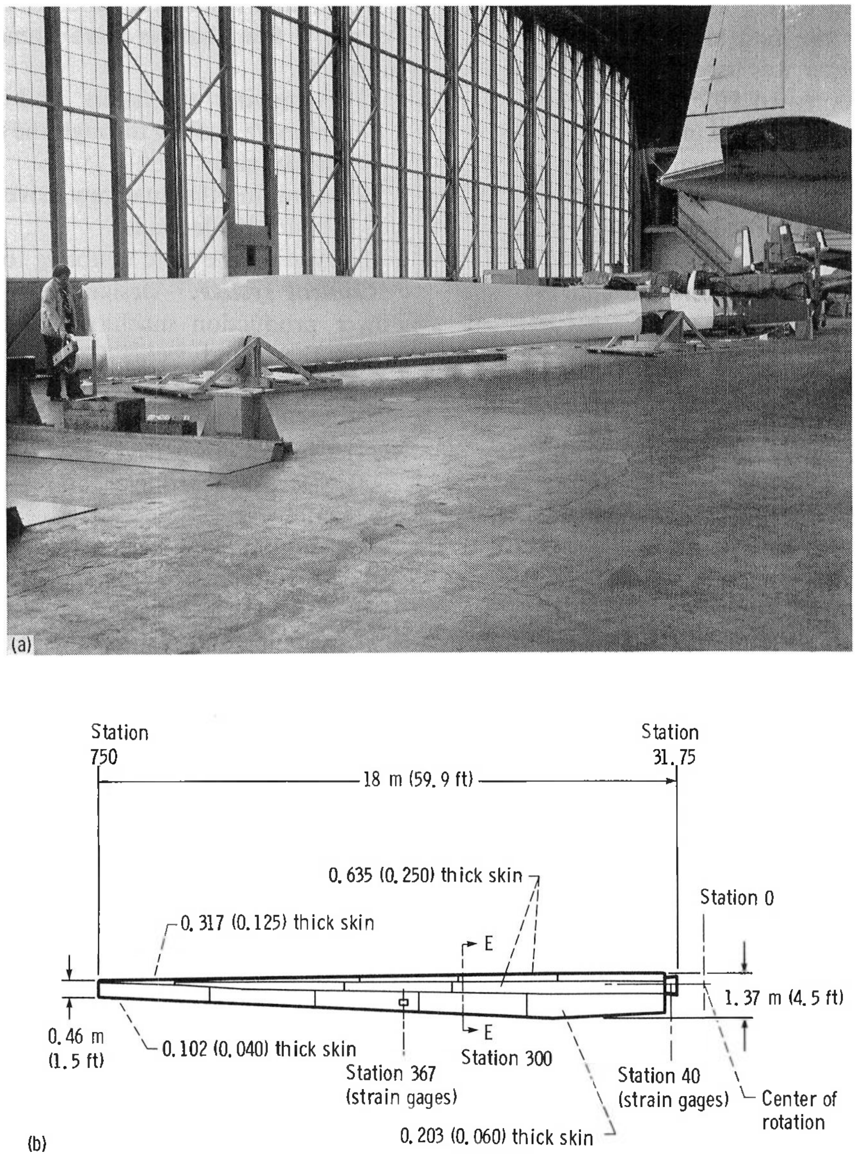

(a) Turbine blade ready for installation.
(b) Turbine blade dimensions. Weight, 907 kg (2000 lb). (Skin thicknesses are in centimeters (inches).)
Figure 17. – Mod-0 turbine blade.

Tower development. – Recordings of the blade load suggested that the tower shadow was one of the main problems. Wind tunnel testing of tower models showed that removing the stairs and the elevator system rails shown in figure 1 would reduce the loading to more acceptable levels. During this investigation a more subtle blade loading problem was identified: bedplate/nacelle cyclic yaw motion. The blades were rhythmically moving the yaw drive system. This was corrected by stiffening the yaw drive system and installing a yaw brake. The combination of these modifications reduced the blade loads to the design level and insured a much longer lifetime for the blades.

Three different tower designs were modeled during the course of the wind tunnel testing at NASA Lewis. Comparison of the three tests pinpointed the tower design features that were the most significant wind shadow producers. Experimental tests showed that the simpler and more open tower designs had a smaller tower shadow (refs. 16 and 17).

Vibration is a major problem for wind turbine systems since material fatigue and component failure are the most important factors in determining useful lifetime. Establishing the vibration characteristics of the Mod-0 system was thus of high priority. Vibration studies of Mod-0 were also important in assessing the value of the computer models used in the design process.

The Mod-0 system was vibrationally tested in an incremental fashion. First the tower was tested alone. Then the nacelle and blades were mounted on the tower.

Artificially vibrating an object as large as the Mod-0 tower is not easy. For the first simple tests an instrumented hand-held hammer was used. The more difficult tests required an instrumented 90.7-kg (200-lb) weight. When the tower was struck by the instrumented weight, ringing (a measure of vibrational frequency) was measured by accelerometers at various points. The frequencies of the ringing recorded by the accelerometers were then compared with the vibrational frequencies predicted by the computer code (refs. 18 and 19). The code predicted well.

The pulse produced in the rotor as the blade passes through the wind shadow of the tower generates harmonic forces in the drivetrain, the tower, and the rotor. The forces are integral multiples of the rotor speed. For a two-blade rotor the tower is "excited" twice per revolution of the rotor. Mod-0 is dynamically stiff. Although this makes the tower heavier and more costly, it also assures that the tower structure will not resonate in response to normal rotor speeds.

Trials with six different computer codes for Mod-0 performance showed that all of the codes could predict blade loads within 25 percent (ref. 20). One code, REXOR–WT, was the most consistent in calculating loads that were close to measured loads. The codes differed in the amount of detail they considered. Three of the codes considered only the rotor itself; the other four included the tower in the calculations. Both types of code have their place in design. It takes much more computer time to do a detailed analysis. The simpler codes are useful for initial design work. Thus the computer codes developed for Mod-0 can serve as useful heuristic tools for future design.

NASA Lewis used the computer codes to determine the best method of reducing loads on the Mod-0 blades with a minimum of redesign. Two contrasting designs were investigated: one using teetering blades and one using blades rigidly attached to the hub as the existing Mod-0 blades were. Analysis showed that the teetering blades would reduce both the blade loads and the tower loads (ref. 21).

Vibration in portions of the machine other than the rotor and tower must be considered. Vibration of the drivetrain, for example, can be caused by the varying power delivered by the blades as they rotate. Computer modeling of the drivetrain indicated that significant vibrations could occur this way in at least two instances: when the wind turbine is connected to a resistive load and when the wind turbine, connected to a power line, reaches an output of 10 kW. As a result, NASA designers changed the drive system to control possible vibrations. A fluid coupling was added to the drivetrain. It functions much like a shock absorber to help damp the drivetrain. Since the amount of damping or slip can be varied by adjusting the level of fluid, it is ideal for an experimental program.

Thus, after installation and testing of the initial Mod-0 design, a few changes were immediately made. These included

(1) Removing the stairs and other equipment to improve airflow through the tower and thus reduce blade loads
(2) Installing the dual yaw drive and the yaw brake to reduce blade loads
(3) Adding the fluid coupling to damp the drivetrain

Control system. – Designed to be a fully automatic power production machine, Mod-0 needed a control system that could

(1) Monitor the wind conditions
(2) Maintain alignment with the wind
(3) Control power level
(4) Start, synchronize, and stop the wind turbine safely
(5) Monitor key parameters to assure that critical items operate within specified tolerances
(6) Provide a remote operator the capability of stopping and starting the machine

To accomplish these tasks, five separate control systems were designed: the rotor blade pitch controller, the yaw system, the microprocessor, the safety system, and the remote control and monitor system. Of these, only the yaw controller is completely independent. The degree of interaction among the other control systems varies with operating mode and conditions (fig. 18). The pitch controller adjusts blade pitch to control rotor speed or alternator output power. Wind turbine rotor power is a function of wind speed and blade pitch angle. Therefore either rotor speed or rotor power at a given wind speed can be controlled by adjusting blade pitch angle. This system is supervised by the microprocessor, which selects the operating mode and the set point.

The Mod-0 pitch controller uses a hydraulically actuated blade pitch mechanism to maintain either rotor speed or rotor power. Increasing the blade pitch angle increases rotor power; decreasing the angle reduces power. A pitch angle limit is set that avoids stall at low wind speeds and prevents structural damage at high wind speeds. At shutdown, blade pitch angle is reduced until a zero power output is achieved. The alternator is then disconnected from the network, blade pitch angle is decreased until the rotor stops, and the blades are feathered.

The yaw controller, which keeps the turbine aligned with the wind, operates independently from the other control systems. It is powered by two motors, which can turn the nacelle at a constant speed of 1 deg/s. Information from a wind vane on the nacelle provides a direct measure of the apparent wind direction relative to the nacelle—a direct measure of yaw error. The original controller sampled the wind every 15 seconds and responded directly to all significant changes. However, this caused almost constant operation of the yaw motors.

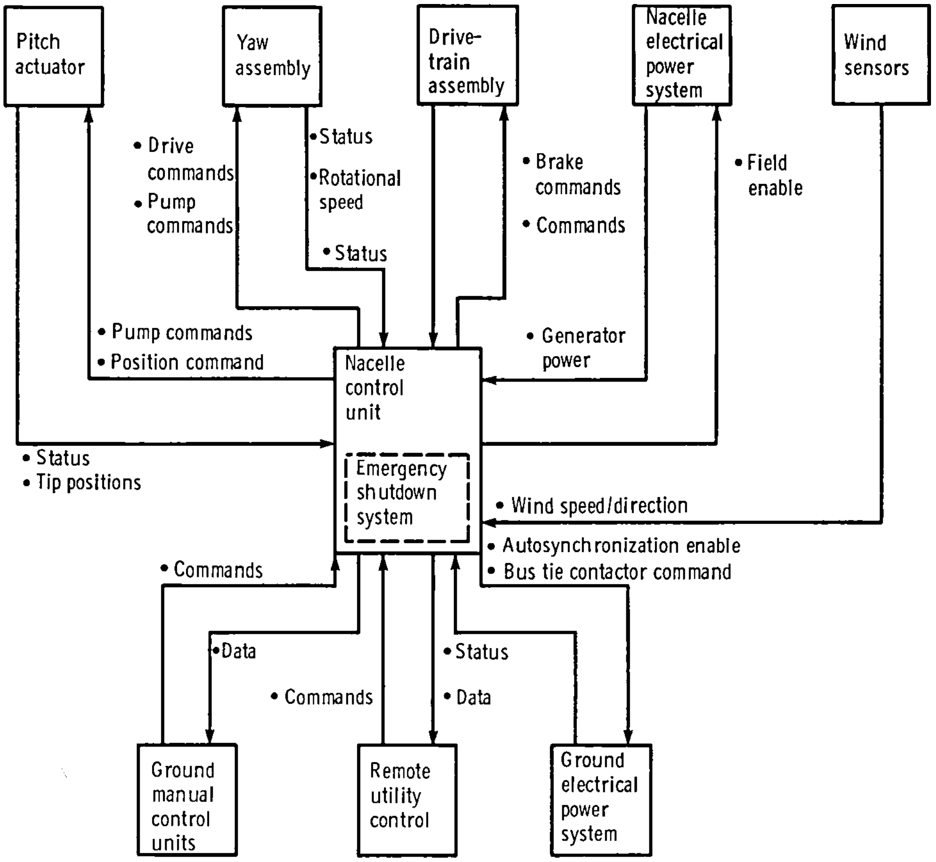

Figure 18. – Control system interface diagram.

Subsequent tests using 30-second samples and a slightly less rapid response to changes in the wind speed cut the typical operation of the yaw motors to less than five times an hour. Even with this reduced use of the motors, the overall pointing accuracy of the rotor is not significantly different.

The yaw brake installed to reduce blade loads restrains the nacelle in yaw. This serves as a backup for the dual yaw drive and increases stiffness in yaw. The yaw brake system is maintained at constant pressure and operates continuously as a frictional restraining force (ref. 1).

The microprocessor, which controls the automatic operation of the wind turbine, including startup, synchronization, and shutdown, permits unattended automatic operation of the turbine. Once enabled, the microprocessor monitors the wind and begins the startup sequence when the wind reaches an appropriate speed. The microprocessor concurrently starts the pitch hydraulic system and, after the pressure builds up, the rotor blades are pitched at a rate of 8 deg/s toward the power position. When the rotor speed exceeds 5 rpm, the microprocessor switches the pitch control to speed control and continues the startup sequence. It activates the alternator field when the rotor nears synchronous speed. The alternator is connected to the power grid and the pitch controller is switched to the power control mode. The set point is advanced to 100 kW, completing the startup.

The shutdown sequence is also controlled by the microprocessor. It can be initiated by operator command, wind conditions, the safety systems, or several checkpoints in the microprocessor program itself.

The safety system monitors system operation and shuts the wind turbine down when it detects a reason to do so in any of the operating variables. The safety system overrides all other systems and operates the equipment directly. The operating variables are temperature in bearings, gears, alternator, fluids, and the pitch hydraulic pump motor; vibration in the rotor; pneumatic pressure in the emergency feather gas bottle; hydraulic pressure and level in the pitch and yaw control systems; yaw error; electrical parameters; rotor overspeed; and microprocessor functions.

The remote control and monitor system allows an operator to monitor machine performance and to activate the microprocessor. This system is the highest level of command when the wind turbine is operating unattended. It gives the "go/no go" command to the microprocessor. The remote operator receives status reports showing machine conditions, position of blades, and mode of operation as well as six possible error conditions from the safety systems.

The status of the microprocessor is also indicated on the control function panel, and machine performance can be monitored through an analog display of data on wind speed, rotor speed, power, and reactive power (known as VARS).

The successful operation of a wind turbine generating power for a utility grid requires precise synchronization to the utility frequency. The operations leading up to final synchronization are performed automatically in actual operational conditions. However, for the Mod-0 the experimental nature of the machine made it difficult and time consuming to rely on such electronic controls. The microprocessor computer allows easy changes in the control system by simply changing commands in the microprocessor memory. The present low cost of microprocessor systems made this the most cost-effective setup. This approach contributed to bringing the wind turbine on-line quickly since it was possible to switch between testing and operation rapidly. Overall the system performed well and made many unattended startups and shutdowns including the delicate process of connecting the wind turbine to the power line. The frequency of the alternator must match that in the power line. The phase angle must also be within a narrow band. There is a short time window during each power line cycle when synchronizing can be accomplished.

The synchronization process is analogous to midair refueling of aircraft when the speeds of two independent vehicles must be matched exactly and held while the fragile boom is connected between the aircraft. In a like manner the synchronizing relays (equivalent to the boom) are thrown only when the frequencies match. Thus the control system must maintain the rotor speed within narrow limits.

Mod-0A

To introduce utilities to the use of wind turbines in their power-generating systems, DOE funded and NASA Lewis administered the Mod-0A project. Four Mod-0A machines (fig. 19), much the same machines as Mod-0, were built and installed at utility locations. The first of these was at Clayton, New Mexico, where the town of Clayton started operating the 200-kW Mod-0A in March 1978. This was followed by the Puerto Rico Electric Power Authority, which began operating the Mod-0A on the island of Culebra, Puerto Rico, in January 1979. The Block Island Power Company first operated the Mod-0A on Block Island, Rhode Island, on May 1, 1979; and the Hawaiian Electric Company began operating the Mod-0A on Oahu, Hawaii, in May 1980. These sites were

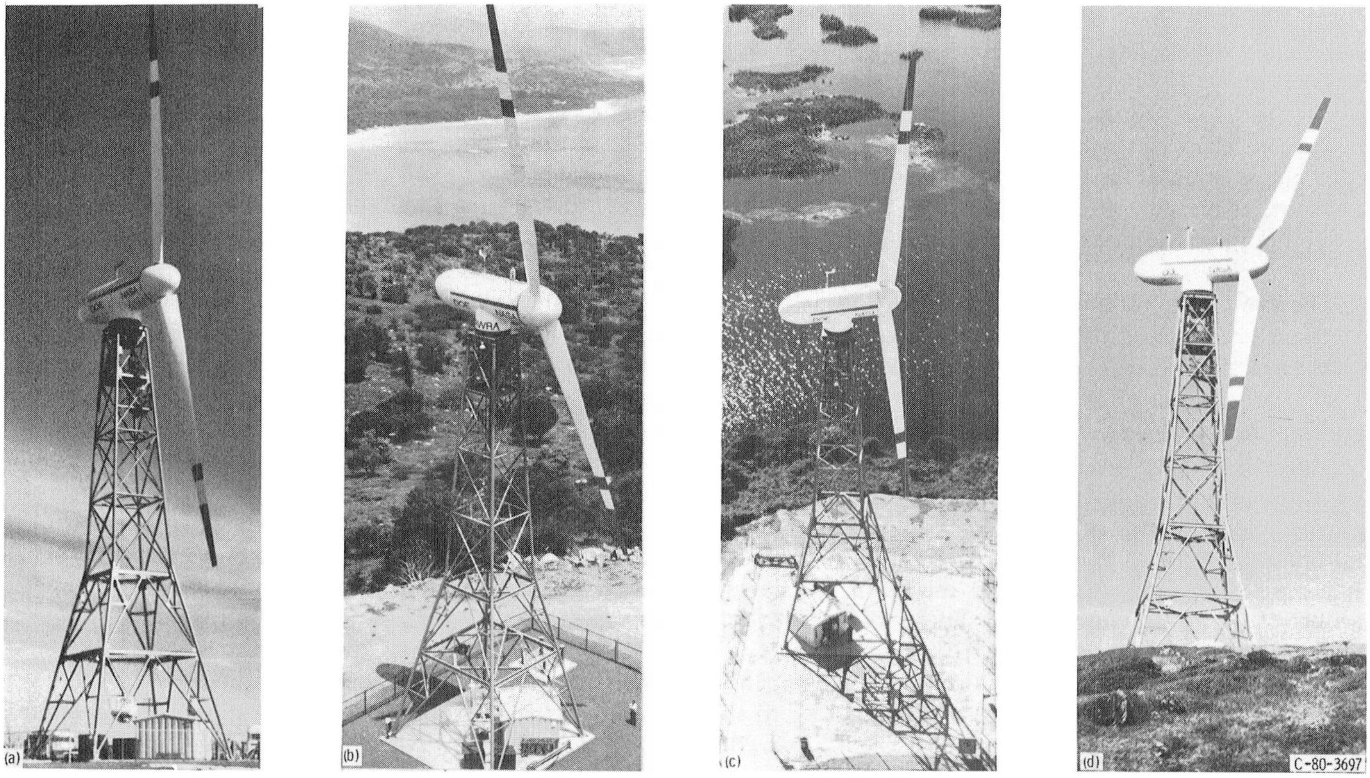

(a) Clayton, New Mexico.
(b) Culebra, Puerto Rico.
(c) Block Island, Rhode Island.
(d) Kahuku Point, Oahu, Hawaii.

Figure 19. – Mod-0A wind turbines.

chosen from among the 17 candidate sites selected by DOE.

The Mod-0A project has been successful in gathering experimental and performance data on wind turbines operating in typical utility environments. Two of the issues anticipated at the start of the Mod-0A program were the effect of variable power output due to varying wind speeds on the utility grid and the compatibility of the wind turbine with utility requirements for power voltage and frequency control. Operation of the Mod-0A machines has dispelled concern over these issues. Mod-0A also demonstrated unattended, fail-safe operation and the reliability of wind turbine systems while providing an opportunity to evaluate the maintenance required and any public reaction.

Operating parameters. – Mod-0A is designed to produce 200 kW at a rated wind speed of 10 m/s (22.4 mph). The cut-in wind speed is 4.2 m/s (9.5 mph) and the cutout speed is 17.9 m/s (40 mph).

Four design wind speed ranges govern the operation of Mod-0A (fig. 20). Below a wind speed of 4.2 m/s (9.5 mph) at the rotor hub the blades are feathered and the wind turbine is turned off. From 4.2 to 10.0 m/s (9.5 to 22.4 mph) the blades are pitched to extract maximum power; from 10.0 to 17.9 m/s (22.4 to 40 mph) the available wind power exceeds 200 kW and the blades are pitched slightly toward the feathered position to spill power and thus maintain 200-kW output; and above 17.9 m/s (40 mph) the blades are fully feathered and the machine is shut down to prevent excessive loads on the machine. The entire structure is designed to withstand winds to 66.7 m/s (150 mph). These wind parameters are not absolutes, however. They can be varied to take best advantage of wind characteristics at specific sites. Operating experience has led to several adjustments in wind-based operating parameters. It requires from 2 to 4 minutes to bring the Mod-0A from a parked configuration to energy production in synchronization with the utility grid.

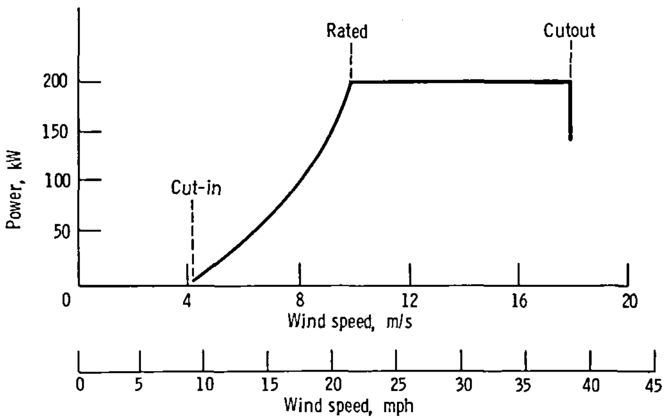

Figure 20. – Mod-0A operating characteristics.

Rotor. – The Mod-0A rotor has a diameter of 38.1 m (125 ft). The first three machines used aluminum blades fabricated by Lockheed Aircraft Services, Ontario, California. Each blade was 18 m (59.9 ft) long and weighed 1070 kg (2360 lb). The blades are heavier than the Mod-0 blades because of the greater wind load Mod-0A is intended to carry. The fourth machine, installed in Hawaii, used laminated-wood-epoxy blades.

The first three sets of blades were made of heat-treated 2024-T3 aluminum except for the cylindrical blade root shank, which was made of steel. The blade, a main load-carrying spar and ribs covered by a thin sheetmetal skin, is similar in appearance to a conventional airplane wing (fig. 21). The nominal cost of the Mod-0A aluminum blade is $220/kg ($100/lb).

The rigid rotor hub of Mod-0A houses the pitch change assembly. The pitch can be adjusted at a maximum rate of 8 deg/s. At winds above 10.0 m/s (22.4 mph) the pitch angle is decreased to spill wind to keep the electric power generation at 200 kW or less.

Tower. – The tower, 28.3 m (93 ft) high not including the hub and nacelle, is an open truss type using round pipe members to maximize airflow through the tower and thus minimize shadow on the downwind rotor. An electric hoist, instead of a stairway, provides access to the nacelle to further reduce tower shadow.

Nacelle and rotating equipment. – The fiberglass nacelle that houses the rotating equipment is similar to the Mod-0 nacelle but slightly larger. Figure 22 shows the interior of the nacelle, typical for the Clayton, Culebra, and Block Island Mod-0A machines.

The high-torque-low-speed power of the hub is transmitted to the gearbox in the nacelle through a low-speed shaft. A 45:1 fixed-ratio gearbox transmits the power to the high-speed shaft at low-torque-high-speed power. A belt-and-pulley drive transfers power to the generator. The belt-and-pulley system allows changes in the nominal 40 rpm of the low-speed shaft while maintaining the constant 1800 rpm required by the generator.

The Mod-0A gearbox was uprated, as compared with the Mod-0 gearbox, to safely carry the power to the 200-kW generator. The single-shaft yaw assembly originally used on the Mod-0 was replaced on the first three Mod-0A's with a dual yaw drive. The yaw drive operates whenever the wind speed exceeds the turbine's cut-in wind speed. The yaw drive is braked by pressure from three disk brakes. The brakes damp yaw oscillations, help reduce blade bending moments, and damp torsional oscillations with a drag force. Once the machine has aligned itself to the wind, brake pressure increases to maximum.

The Mod-0A installed in Hawaii incorporated several design changes that improved the operating performance. The dual yaw drive was replaced with a hydraulic yaw drive (fig. 23) that holds the nacelle more firmly when the machine is yawing. The belt drive between the high-speed

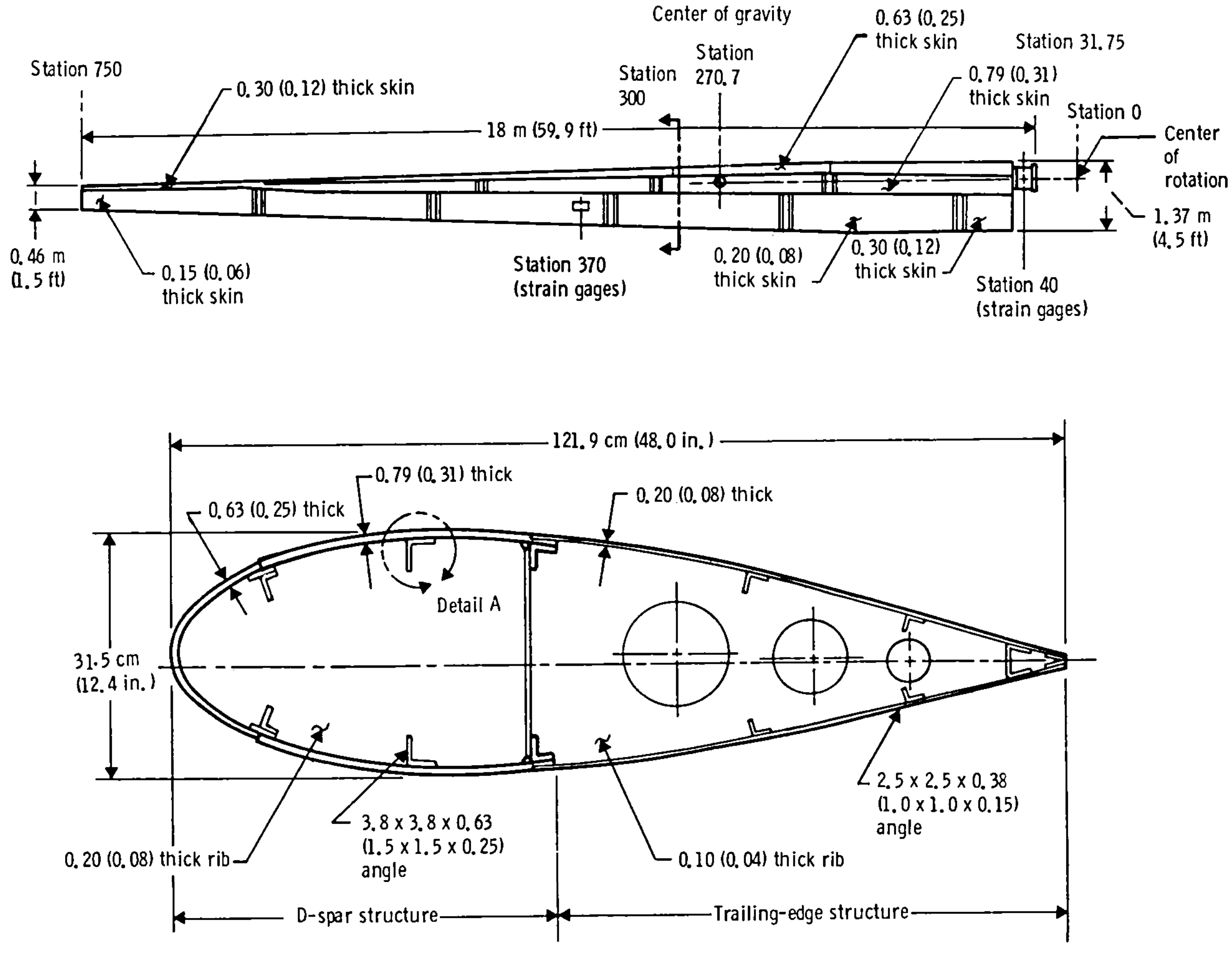

Blade section taken at Station 300

Figure 21. – Mod-0A aluminum blade and typical cross section. Weight of blade, 1070 kg (2360 lb). (Skin thicknesses are in centimeters (inches).)

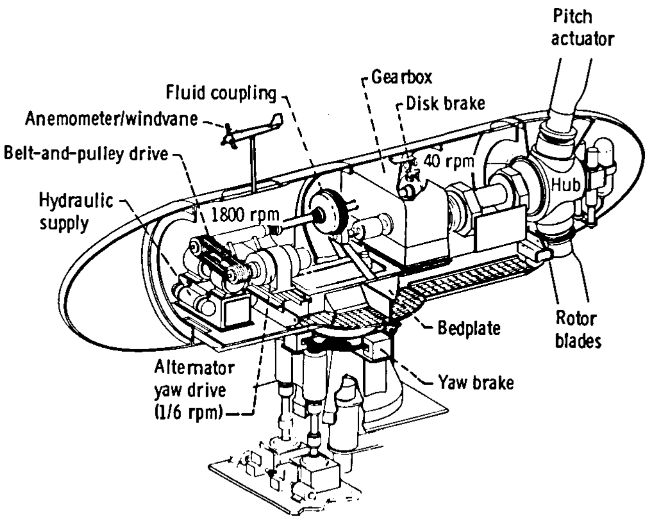

Figure 22. – Schematic of original Mod-0A nacelle and interior equipment.

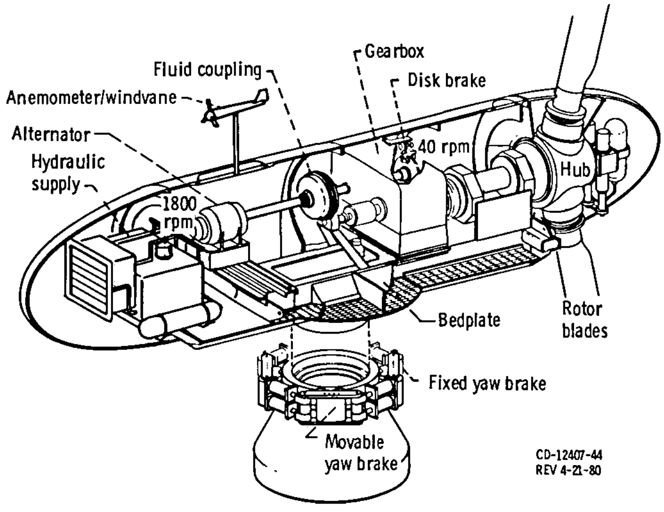

Figure 23. – Schematic of Hawaiian Mod-0A nacelle and interior equipment.

drive shaft and the generator was removed, and the generator was connected directly to the gearbox through a fluid coupling. The aluminum blades used on the first three machines were replaced with laminated-wood-epoxy composite blades (fig. 24).

Control system. – The control system's major components are most like those of the Mod-0. A microprocessor, which continuously monitors the wind speed sensor, starts the turbine at cut-in speed, brings the turbine to speed, and synchronizes it with the utility. The microprocessor also automatically shuts down the rotor when the wind speed drops below cut-in or exceeds cutout.

The yaw controller uses a wind direction sensor on top of the nacelle but only operates above cut-in speed. A microprocessor handles the yaw control. The Mod-0A yaw mechanism is activated whenever the averaged yaw error is excessive. The yaw drive then rotates the nacelle until the yaw error is reduced to zero and the turbine is properly aligned to the wind.

A remote control and monitoring system at the utility power dispatcher's center permits manual starting and stopping of the microprocessor. As in Mod-0 a digital readout of wind speed, rotor speed, power, VARS, current, and voltage is provided. In case of an automatic shutdown the relevant data are also transmitted. A safety system for automatic shutdown operates independently of all other controls to prevent catastrophic failure.

Since the Mod-0A machines are dispersed around the country, a mobile data system was developed for Mod-0A machines that can be connected into a wind turbine and completely check out its systems (ref. 22). The mobile data van equipment scans 100 channels of data, taking analog real-time data as well as collecting digital information for later processing (fig. 25). One remote multiplexer unit (RMU) is installed on the wind turbine hub, another on the bedplate, and a third in the control house at the base of the tower. Each transmits signals via one or two coaxial cables to the vehicle. The mobile data

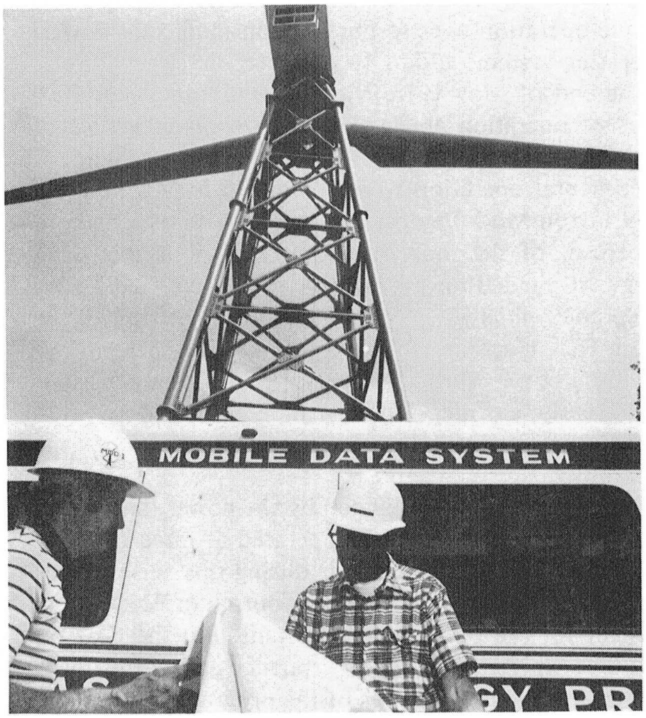

Figure 25. – Mobile Data System at Mod-1 site.

Figure 24. – Laminated-wood-epoxy composite blade used on Mod-0A. Length, 18.3 m (60 ft).

van can travel over public highways without special permits or approvals. Its air-ride suspension on both front and rear axles limits vibration and shock to the data-processing equipment, and the heating and cooling units control the interior environment properly.

Operating experience. – The first Mod-0A began operating in Clayton, New Mexico, on November 30, 1977, for checkout and tests. The machine was dedicated on January 28, 1978, and in March 1978, NASA turned routine operation over to the Clayton municipal power-generating system, adding to its seven diesel generators. At the end of May 1978, Mod-0A had completed 1000 hours of operation and generated over 94 000 kWh of electricity for the utility network. The first two years of experimental operation were completed in March 1980. The Clayton Mod-0A operated for 6000 hours, or about 80 percent of the time during periods of usable wind energy. It yielded an average hourly output of 92 kW. Acceptable winds were available about 57 percent of the time. The machine supplied about 2.5 percent of Clayton's power during off-peak periods. On occasion, during early morning, the machine produced over 20 percent of the total power requirements of the community.

The power generated divided by the power that would be generated if the generator operated at rated capacity 100 percent of the time was 0.2 during this period. This plant factor and the average power output of 92 kW were excellent for the first operational unit. But the Clayton Mod-0A experienced several startup and adjustment problems in the early phases of the program. There were difficulties with electrical noise. A number of false safety shutdowns occurred before proper adjustments and settings were determined. The blades were also modified and repaired several times (refs. 7 and 23). A blade load monitor was added to the safety system to shut down the machine when high loads are encountered. And the high feather rate used in the safety system shutdowns was reduced.

Another early problem encountered at the Clayton Mod-0A turbine was the buildup of ice on the rotor blades. The limited experience with the Smith-Putnam wind turbine in the 1940's indicated that the blade would flex enough to shed ice before it could build up. The Clayton experience confirmed this; however, the shedding process created a potential hazard. The blade tip speed is 79 m/s (260 ft/sec) and pieces of ice up to 20 cm (8 in.) long were shed on one occasion. To prevent this hazard from recurring, an ice detector was installed that indicates the onset of ice buildup. The safety system senses a signal from the ice detector as ice is building up and orders the machine to shut down. The system has prevented operation during icing conditions but has also decreased wind turbine availability during the winter months.

In October 1978, the Clayton Mod-0A had completed 2000 hours of operation and generated 181 000 kWh of electricity. Further repairs were needed in December 1978, when a generator bearing failed because of excessive radial loading. It was replaced with a bearing designed to withstand the radial loading. On March 1, 1979, the fluid coupling was replaced after the unit developed a fatigue crack. In August 1980, the original experimental aluminum blades were removed and returned to NASA Lewis for inspection and storage. A set of modified Mod-0 aluminum blades were temporarily installed at Clayton upon removal of the Mod-0A aluminum blades. One of the experimental Mod-0 modified blades developed an unexpected fatigue crack in October 1980. As a result the machine was shut down until an experimental set of short (14 m (46 ft) long) wood blades could be installed in February 1981. The short wood blades were used to obtain rotor performance comparisons with square and rounded blade tips. These experiments were completed, and during August 1981 the first set of 18.3-m (60-ft) long fiberglass composite blades were installed on the Clayton machine. The machine resumed operation and successfully operated for over 10 000 hours on the utility network that month.

In April 1981, it was necessary to replace the fluid coupling for the sixth time. A reinforced coupling was installed and eliminated further fatigue cracks in the steel coupling housing.

On June 30, 1982, the experimental test project at Clayton was completed and the machine was shut down and placed in a standby status. The fiberglass-epoxy composite blades successfully completed over 3000 hours of operation. A blade inspection revealed no signs of deterioration. Plans were begun with the utility company to decide on the machine disposition. The City of Clayton decided to have DOE and NASA remove the machine. Removal was completed in October 1982. The Clayton machine operated for over 12 000 hours on the utility network and produced over 1100 MWh of electricity.

The Mod-0A wind turbine on the island of Culebra, Puerto Rico, was first rotated on June 26, 1978. The machine had completed its first 100 hours of operation in September, and the Puerto Rico Electric Power Authority took over its operation in January 1979. The machine was normally unattended and operated remotely by the utility company at San Juan via a radio communication link between the wind turbine and the utility dispatcher.

In May 1979, the machine was shut down for a complete blade inspection. Repairs similar to those performed on the Clayton Mod-0A blades were begun. The blades were returned to the machine in February 1980 and machine operations resumed.

The hot, humid climate on Culebra caused corrosion of some electrical connections and promoted fungus growth in some electronic packages. This caused a number of machine outages. By installing an air conditioner in the control room, fungus growth was eliminated and corrosion was reduced. As a result, the reliability of the microprocessor and associated instrumentation was improved. In January 1981, the rotor speed was reduced from 40 to 31 rpm. This speed reduction was carried out to extend the operational life of the aluminum blades until a set of experimental wood blades could be manufactured and installed on the machine. The experimental wood blades were installed in August 1981. The experimental operation of the Culebra machine was completed and the machine was shut down on June 4, 1982. The wood blades operated for 2800 hours at 31 rpm with no sign of blade degradation. The machine accumulated a total operating time of 8094 hours and generated 683 MWh of electricity.

The Block Island wind turbine first rotated on May 1, 1979. The utility took over operation of the machine on October 12, 1979. As a result of the aluminum blade modifications for the Clayton and Culebra machines, the aluminum blades for the Block Island machine were modified during their buildup. Because of the relatively high cost for aluminum blades as compared with wood blades, further development effort on aluminum blades was terminated when the Block Island blades were delivered to NASA. Experimental operation of the aluminum blades was completed in July 1980 when experimental wood blades were installed.

The privately owned Block Island Power Company (BIPCO) is isolated from other power sources located on the mainland. The utility company serves a population of about 300 permanent residents. During the summer, however, transient residents number up to several thousand. As a result, power demands seasonally vary from 250 kW during the winter months to over a megawatt in the summer. During the winter season the Mod-0A wind turbine was configured to generate a maximum of 150 kW. The wind turbine operated in parallel with two diesel generators to serve an average load of 350 kW. The Westinghouse Electric Company conducted experiments at Block Island for NASA to assess the interaction of the wind turbine with BIPCO. Experiments were conducted from February through April 1982. During this test period the Mod-0A saved 11 657 kg (25 700 lb) of diesel fuel. This fuel saving represented a 6.7 percent reduction in fuel consumption while the wind turbine generated 11 percent of the utility's needs. On June 4, 1982, the Mod-0A experimental test program at Block Island was completed and the machine was shut down. The machine operated for a total of 8509 hours and generated 588 MWh of electricity. The wood blades operated over 7500 hours at 31 rpm.

Procurement of the Oahu wind turbine components began and site preparation work started in the fall of 1979. Three key design features on this Mod-0A are wood blades, a direct-drive alternator, and a hydraulic yaw drive. The Hawaii Mod-0A is the first machine to have wood blades as its primary design. The Gougeon Brothers, Bay City, Michigan, designed and built the blades for NASA. The direct-drive alternator that replaced the previous belt-driven design and the hydraulic yaw drive were designed, fabricated, and assembled by the Advanced Energy Systems Division of Westinghouse Electric Corporation. This machine started utility operation in June 1980.

In November 1981, after 7800 hours of power generation on the network at 40 rpm, a broken blade retention bolt was found at the base of the machine. The bolt, one of 24, was used to fasten the blade to the machine. The failure was the result of corrosion. Each blade accumulated over 18.7 million load cycles while supplying electricity to the Hawaiian Electric Company. This blade set was returned to NASA for evaluation and repair.

The second experimental wood blade set was installed on the machine in March 1982. Each blade had a rounded tip fairing, rather than the square tip configuration used on the first set of blades. Rotor performance comparisons were conducted on the first and second sets of blades. Better rotor performance was obtained with the rounded-tip blades. On June 4, 1982, the experimental operation was complete and the machine was shut down. The machine generated 1261 MWh of electricity during its 8444 hours of operation on the network. The second set of wood blades operated for over 600 hours before the machine was shut down.

The objective of the Mod-0A project was to gain early operating experience with large wind turbines in a variety of utility and wind site environments. From the first rotation at Clayton in November 1977 to shutdown in June 1982, the four machines accumulated over 38 000 hours of experimental operation. The objective to gain early operating experience had been achieved. The machines demonstrated that each could run unattended with protective systems that successfully detected anomalies before serious damage could occur. It was found that routine maintenance and repair could be done successfully by utility company mechanical and electrical technicians. Compatibility of the Mod-0A with each utility network is not as severe a problem as originally expected. In general, Mod-0A compatibility is well within an acceptable range. Public reaction to the Mod-0A project has been extremely favorable. For example, over 20 000 people have visited the Clayton site. Most visitors surveyed thought that the machine was aesthetically acceptable and that wind energy is a good idea to pursue.

Although the experimental Mod-0A project was highly successful as a research experiment, the first-generation (Mod-0A) design is not economically attractive from a commercial point of view. As a result, all of the Mod-0A machines will be removed from their sites by the end of

1984. Engineering studies conducted during the development and experimental operation of these machines clearly indicated a need for major technology advances in order to make large machines more economically attractive. Resulting improvements have been incorporated in the second-generation (Mod-2) and third-generation (Mod-5) designs.

Mod-1

Mod-1, when installed on Howard's Knob, Boone, North Carolina, was the first DOE/NASA wind turbine in the megawatt class (fig. 26). It was designed to produce 2 MW, or 2000 kW, in a 14.6-m/s (32.6-mph) wind measured at hub height (figs. 27 and 28). When it began operation, Mod-1 was the world's largest wind turbine in a utility network. The machine was designed and assembled by the General Electric Company's Space Division.

Rotor. – Blade fabrication was subcontracted by the General Electric Company to the Boeing Engineering and Construction Company. Each 29.7-m (97.5-ft) long blade used a NACA 44XX series airfoil with a thickness ratio varying from 33 percent at the root to 10 percent at the tip. The twist of 11° varies linearly from root to tip. The blades weighed a total of 18 780 kg (41 500 lb). The major load-carrying member was a hollow steel spar made from A533 grade-B, class-2, high-strength, low-carbon steel. The stainless-steel trailing edge was structurally bonded to the spar as shown in figure 29. The foam-in-place application adjacent to the spar provided a continuously adhered joint between the spar and the trailing-edge sections.

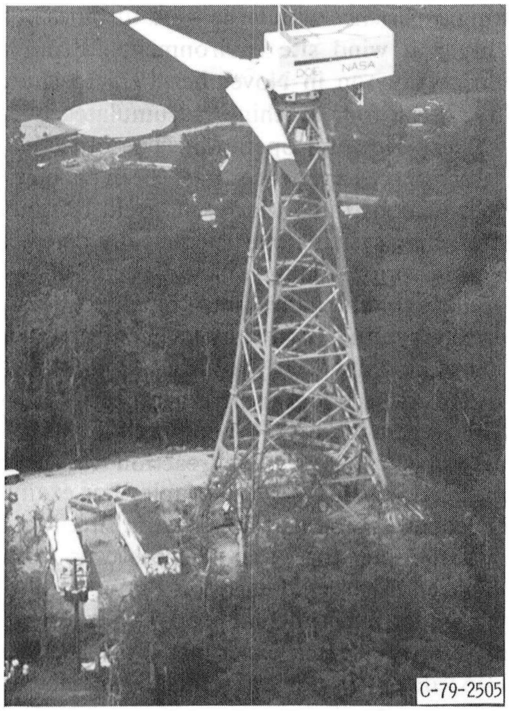

Figure 26. – Mod-1, 2-MW wind turbine at Boone, North Carolina.

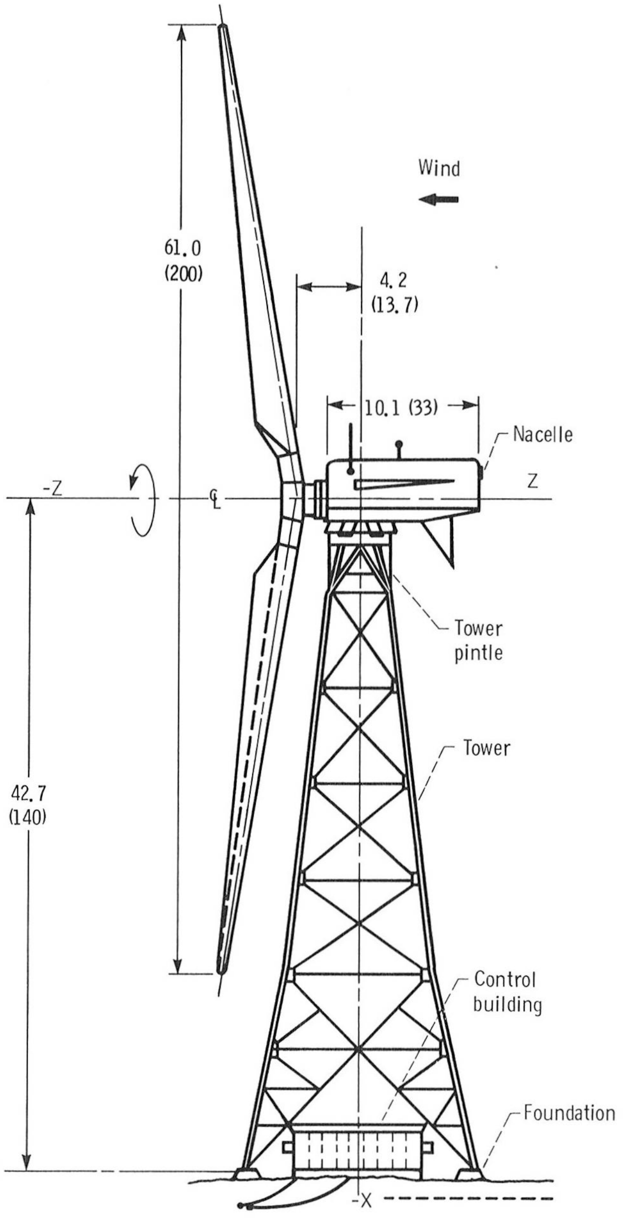

Figure 27. – Schematic of Mod-1, 2000-kW wind turbine. (Dimensions are in meters (feet).)

Located between the blades and the rotor hub was a three-row roller ball bearing (fig. 30). The roller bearing permitted the blade to pitch by 105° from the feather position to the full-power position. Hydraulic actuators changed the blade pitch to control the speed as the wind varied (fig. 31).

Because the rotor hub was of all-bolted construction, the stress limitations of welds were avoided. A lock in the hub was designed to hold the blades horizontally. The feathered rotor could be held fast in the 6–12 o'clock position against a direct 22.2-m/s (50-mph) wind.

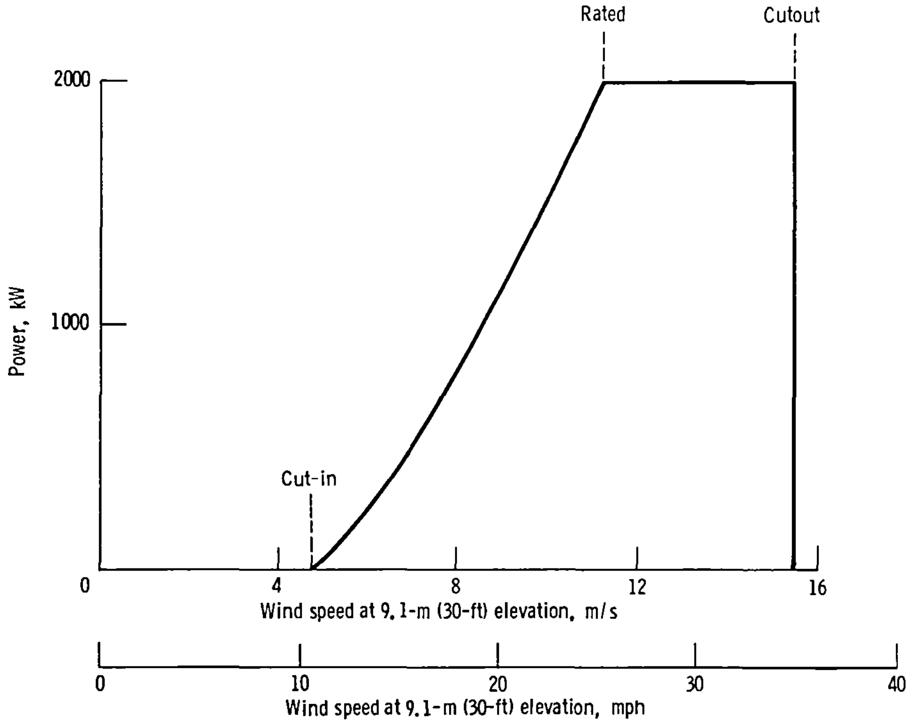

Figure 28. – Mod-1 operating characteristics.

Because the overall design of the blade and hub system was conservative, the components were heavy (table III). However, this design allowed routine testing and extensive instrumentation to provide data for future designs. After trade-off studies were conducted between various types of blades, the metal blade design was selected and fabrication was started late in the Mod-1 system development. The rotor speed is a trade-off between maximum energy capture for the given rotor diameter and the cost. The blades were mounted rigidly to the hub with downwind coning to minimize system loads and with full-span blade pitch control to insure power and speed control under all operating conditions.

Tower. – The Mod-1 tower design evolved after several iterations to satisfy strength and stiffness requirements at minimum cost in the face of increasing design loads. To gain maximum bending stiffness, the tower height was reduced and the dimensions at the tower base were increased.

The Mod-1 tower was of open truss construction. Tower members were tubular to decrease the shadow effect as the blades passed behind the tower. The tower was designed to sustain a maximum wind load of 66.9 m/s (150 mph). Its first bending frequency was at least 2.8 times the rotor operating frequency, and its first torsional frequency was at least 6.5 times the rotor operating frequency.

The requirement that the tower have a life of 30 years and operate at environmental conditions including temperature extremes from –35° to 48° C (–31° to 120° F) affected the choice of structural material. The lower temperature specification placed the fracture-toughness requirements for steel in the most severe environmental class, known as zone 3. A333 structural carbon steel tubing was selected for the tubular tower members because of its suitability for zone 3.

Rotating equipment. – The rotating equipment and control mechanism atop the tower was mounted on a bedplate structure. The bedplate was a box girder construction using plate for all but a few details. A516 grade-70 steel was chosen for the bedplate. This material has good impact strength at low temperatures and is less sensitive to poor welds than the A36 considered earlier. The total assembly on top of the tower including the removable nacelle fairing weighed 77 566 kg (171 000 lb).

The Mod-1 gearbox, shown in figure 32, was a three-stage unit having tandem, articulated, parallel shafts with the input and output shafts on a vertical centerline and having horizontal casing splits. The tandem, articulated shafts permitted the load path to split with equal sharing of the load. A floating shaft assembly transmitted the rotor torque to the speed increaser gearbox.

The generator was a four-pole, 1800-rpm, wye-connected unit with shaft-mounted exciter and a 4160-V output. The synchronous ac generator was driven at 1800 rpm by the high-speed shaft. A shaft-mounted, brushless exciter controlled by a solid-state regulator and power stabilizer provided voltage control. Generator output was brought by cables and a slipring at the yaw bearing down the tower to the ground enclosure. Surge capacitors and related power generation equipment were mounted in a caged enclosure below the generator. Rotation of the

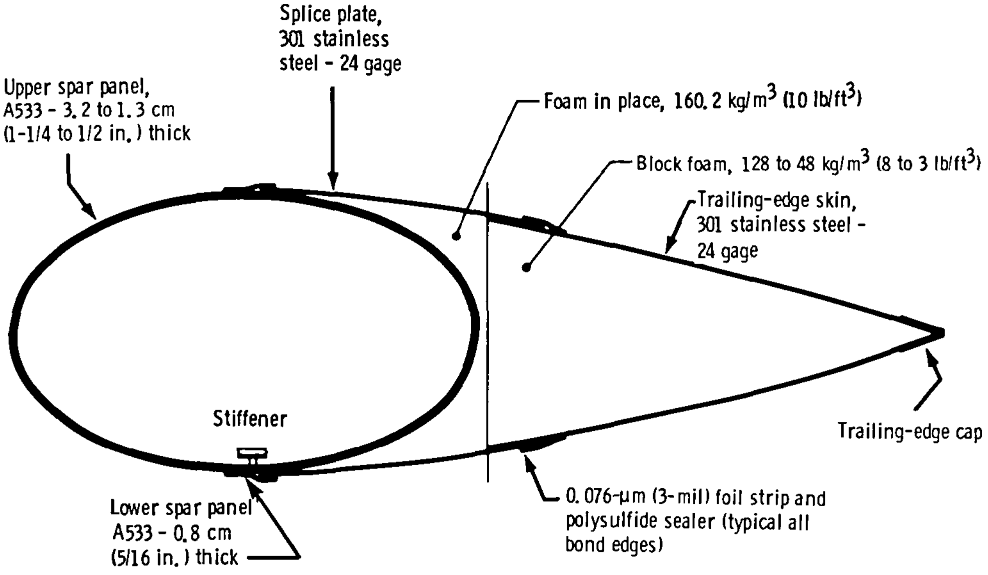

Welded spar

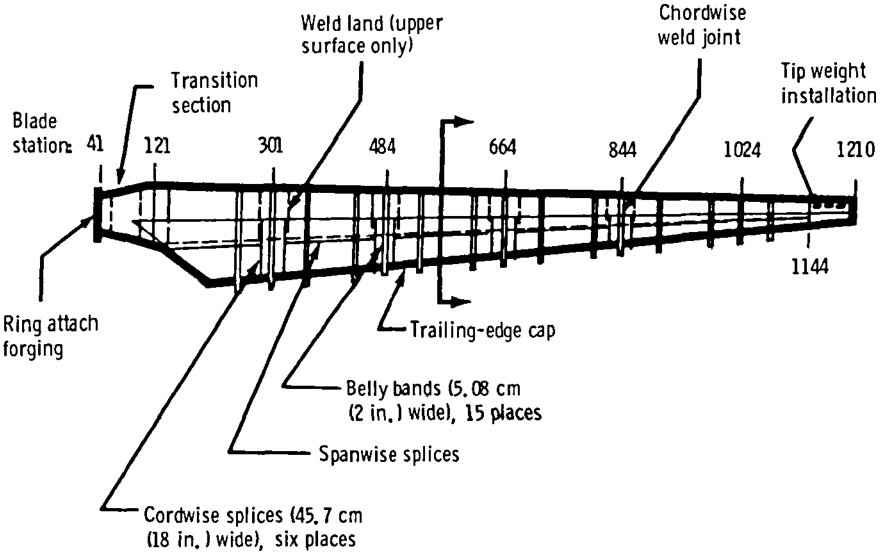

Blade

Figure 29. – Mod-1 blade configuration.

nacelle assembly, including the fairing, rotating equipment, and bedplate was controlled by two hydraulic yaw motors. Each yaw motor drove a pinion meshing with a gear on the inner face of the yaw bearing. Six hydraulic yaw brakes damped movement while the nacelle was being driven and held it in position once the rotor was turned to the wind.

The control subsystem of the Mod-1 determined the rotor blade pitch angle for startup. It also controlled the yaw drive and brake hydraulic system; provided dispatcher control; and recorded data, commands, and status for diagnostics. The control system used the average of the two wind sensors as its signal and could shut the turbine down when necessary.

Operating experience. – The Blue Ridge Electric Membership Corporation (BREMC) operated the Mod-1 wind turbine under the Federal Wind Energy Program. The wind turbine was connected to the cooperative's existing 12 000-V distribution system in Watauga County, North Carolina, which serves Boone as well as

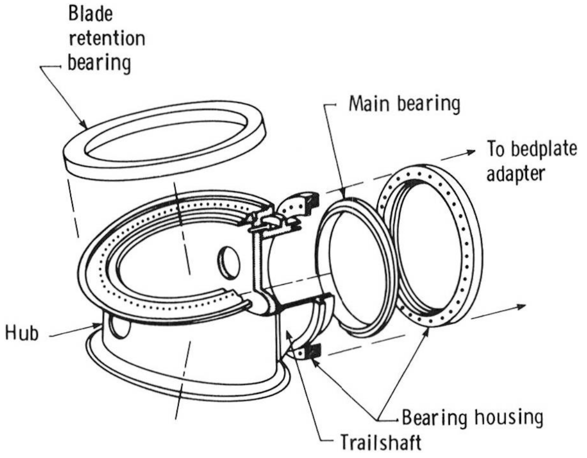

Figure 30. – Mod-1 blade roller bearing.

the rest of the county. The BREMC had a peak load of 136 MW during the winter and purchased its electricity from Duke Power, in Charlotte, North Carolina. The Mod-1 turbine's first rotation was in May 1979 and it was dedicated in July. In September 1979, the Mod-1 machine was synchronized with the BREMC network. Acceptance testing was conducted from October 1979 through February 1980. The machine operated at various power levels up to 2000 kW while control systems were finely tuned and evaluated. Remote operation of the machine by the BREMC dispatcher from Lenoir, North Carolina, was demonstrated during 1980.

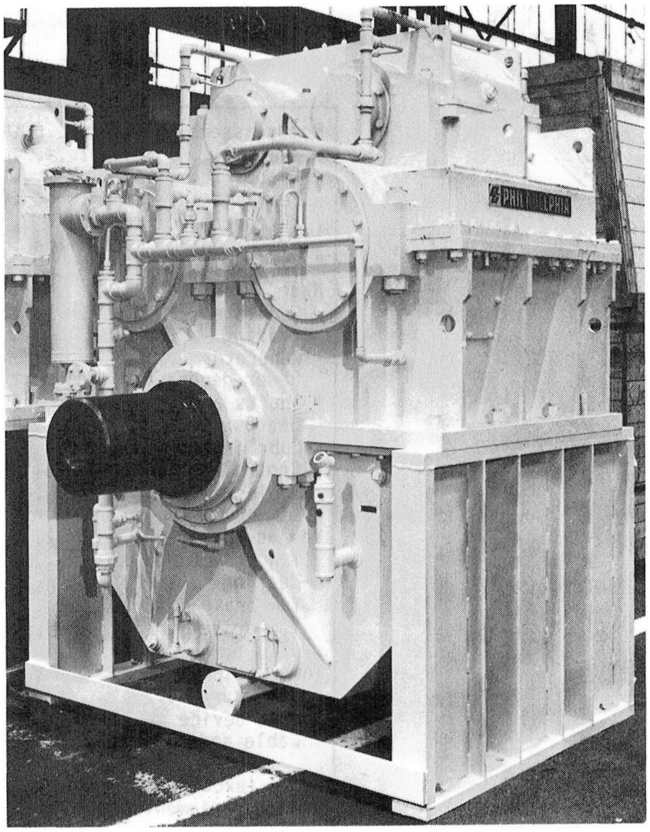

Figure 32. – Mod-1 gearbox.

While the initial checkout of the Mod-1 machine was being conducted during the winter of 1979–80, complaints were received from a few nearby residents that the machine was producing interference with television reception and an annoying noise. Machine operation was restricted to minimize these disturbances to the affected areas while studies were begun to evaluate these environmental issues. It should be noted that only three families complained about the noise and 35 families noted some television interference out of a community with a population of over 10 000.

A number of studies were conducted throughout 1980 at the Mod-1 wind turbine site regarding television reception. The television signal strengths and the quality of reception with and without the turbine operating were

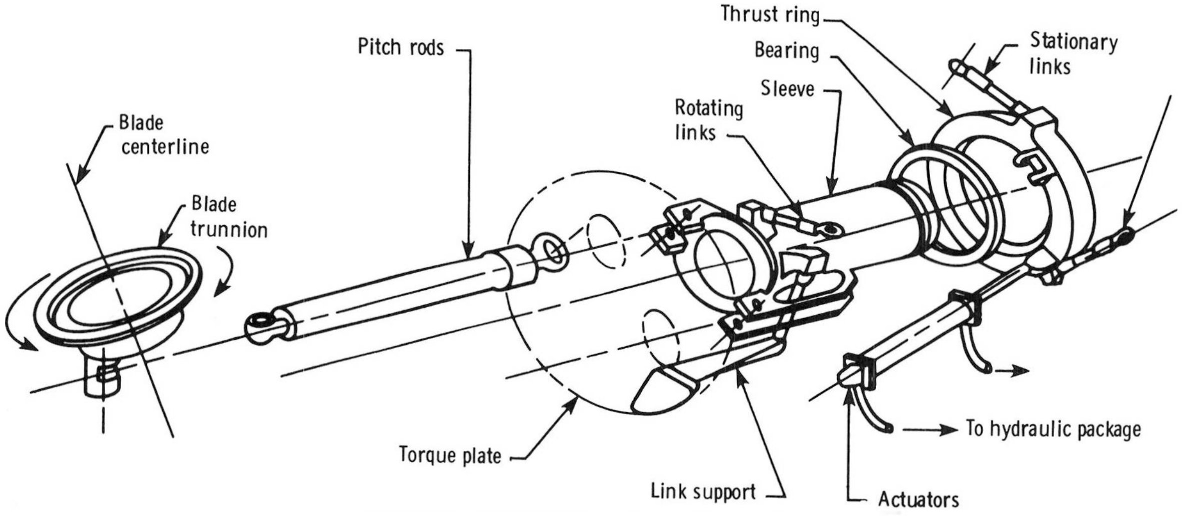

Figure 31. – Mod-1 blade pitch control mechanism.

TABLE III. - MOD-1 SYSTEM WEIGHT BREAKDOWN

[Units are kilograms (pounds).]

Rotor assembly:	46 720 (103 000)
Hub	6804 (15 000)
Blades	16 330 (36 000)
Bearings and supports	13 154 (29 000)
Pitch control mechanism	4990 (11 000)
Pitch control hydraulics	5443 (12 000)
Nacelle assembly:	77 565 (171 000)
Bedplate	30 844 (68 000)
Fairing	2268 (5000)
Generator	6350 (14 000)
Power-generating equipment	454 (1000)
Shafts and couplings	8165 (18 000)
Gearbox	26 309 (58 000)
Lubrication and hydraulic system	1814 (4000)
Control and instrumentation	454 (1000)
Cables, lights, etc.	908 (2000)
Yaw assembly:	25 400 (56 000)
Yaw structure	15 422 (34 000)
Bearing	5897 (13 000)
Yaw brake	454 (1000)
Yaw drive	3629 (8000)
Tower assembly:	145 150 (320 000)
Structure	141 976 (313 000)
Lift device	454 (1000)
Cable and conduit	2721 (6000)
Total (excluding ground equipment)	294 838 (650 000)
Ground equipment (including transformer)	24 494 (54 000)
Total	319 332 (704 000)

evaluated. In addition, in-depth investigations were conducted for a number of potential solutions, which included (1) evaluation of high-gain/low-gain antennas, (2) local rebroadcasting of the television signals, and (3) the expansion of cable television to the affected areas.

The nine television channels servicing the Boone region are quite far away, more than 50 km (31 miles). The surrounding mountains cause video shadows, and television reception should be at best poor in this fringe receiving area. Early test results confirmed that the television signals are weak in the Boone region and that the quality of reception is generally poor. The rotating blades of the Mod-1 wind turbine did cause an extraneous pulse on the video (but not the audio) portion of the television reception at Boone. The use of high-gain antennas to correct the interference seemed to be of limited value for this region.

Special sound teams from the Solar Energy Research Institute and the General Electric Company conducted acoustic tests at the Mod-1 wind turbine site and at surrounding homes during the spring of 1980. Results from these tests indicated that the sporadic sound was produced by the blades passing the legs of the support tower. Test results also showed that reducing the rotor speed would significantly reduce the annoying sound levels. The rotor speed was reduced from 35 rpm to 23 rpm, and in October 1980 a new 1200-rpm synchronous ac generator was installed on the machine. The new generator allowed the wind turbine, operating at 23 rpm, to supply synchronous power to the network. Additional sound tests to evaluate the machine operation at 23 rpm were conducted in January 1981. These tests showed a reduction in sound as expected. During experimental testing in January 1981, a failure of 22 bolts was experienced in the low-speed-shaft connection to the rotor hub. This damage resulted in termination of testing.

An assessment of the data resulting from experimental operation of Mod-1 showed that adequate information was obtained (ref. 9). The experimental Mod-1 project provided extensive engineering information on how to reduce both wind turbine noise and localized television interference caused by a wind turbine. Because the Mod-1 was a first-generation design, like the Mod-0A, it was not economically attractive for commercial utility use. An assessment of the cost to repair and to continue operating the Mod-1 showed that the machine would not be economically viable for the utility company. The General Electric Company developed two plans. Their first plan involved refurbishing the machine at Boone and conducting further experimental tests. Their second plan investigated the feasibility of relocating the machine for operation on another utility network. The resources to carry out each plan were analyzed and compared with the potential benefits of additional experimental data. GE decided not to pursue either plan. As a result, it was decided in the fall of 1981 to dispose of the Mod-1 machine. With the assistance of the General Services Administration the Mod-1 machine was removed from the site in September 1983.

Mod-2

The experience gained in designing and during the experimental operation of the Mod-0A and Mod-1 machines resulted in major improvements in the Mod-2 wind turbine configuration. For example, the rotor on the Mod-2 is teetered and operates upwind of the tower. The Mod-2 (upwind) rotor operates much more quietly than the Mod-1 (downwind) rotor. The teetered Mod-2 rotor operates with lower loads than a rotor with blades rigidly attached to the hub like the Mod-1 configuration. As a result, the teetered Mod-2 rotor is lighter in weight than a similar size rotor with blades rigidly attached to the hub. Another feature of the Mod-2 rotor is the method used to control rotor speed and power. Only the outer tip of each Mod-2 rotor blade pitches, rather than the entire blade as on the Mod-0A and Mod-1 machines. Thus Mod-2 power is controlled by pitching only the tip portion of each blade and is called rotor partial-span pitch control. The Mod-2 machine has a flexible, cylindrical steel tower rather than the rigid steel truss tower common to the first-generation (Mod-0A and Mod-1) machines. A planetary gear speed increaser is used on the Mod-2 machine. The planetary speed increaser is more compact and lighter in weight than the conventional parallel-shaft gearbox.

The three Mod-2 machines (fig. 7) at Goodnoe Hills, Washington, are the nation's first cluster of megawatt machines. Each turbine produces 2.5 MW at a rated wind speed of 12.5 m/s (28 mph). This cluster of wind turbines allows testing of design innovations and the study of the interaction of neighboring machines.

Rotor. – The Mod-2 rotor is 91.5 m (300 ft) in diameter, weighs 87 300 kg (192 500 lb), and operates upwind of the tower (fig. 33). The blades are hollow steel shell construction with steel spar members. Except for two bolted splices made at the site during final assembly, all parts are joined by arc welding. Using a single type of steel throughout the entire blade helped to reduce manufacturing processes and costs. The number of parts was further reduced by the welded construction. Use of steel insures resistance to handling damage during transport and erection; imperviousness to dust, rain, and lightning; and low cost.

With the NACA 23000 series airfoil and surface finish specified for the blade (fig. 34), up to 42 percent of the power available in the wind is converted to rotational power. The blade tip pitches through 100° to control both rotor speed and power output.

Blade tip pitch is controlled by means of a hydraulic actuator mounted from the blade midsection to the blade tip section. Hydraulic flow control to each actuator is governed by a signal from the automatic control system to servovalves. The position of each blade tip is monitored by position transducers that send electrical signals back to the control system.

The pitch control hydraulic system includes an electric-motor-driven pump, a reservoir, and accumulators. The hydraulic system, located in the nacelle, is installed on and rotates with the low-speed shaft (fig. 35). The blade tip actuators and control valves also rotate with the low-speed shaft. Electricity and control signals are transferred from the power control console, located in the nacelle, to the pitch control hydraulic system via brushes and a slipring assembly. The brushes and slipring assembly eliminate the need for a rotating hydraulic coupling between the low-speed shaft and the nacelle.

A flex-plate hub was selected during conceptual design to reduce bending moment on the blade root, but experiments with Mod-0 suggested that some form of articulated blade could further reduce such loads. A

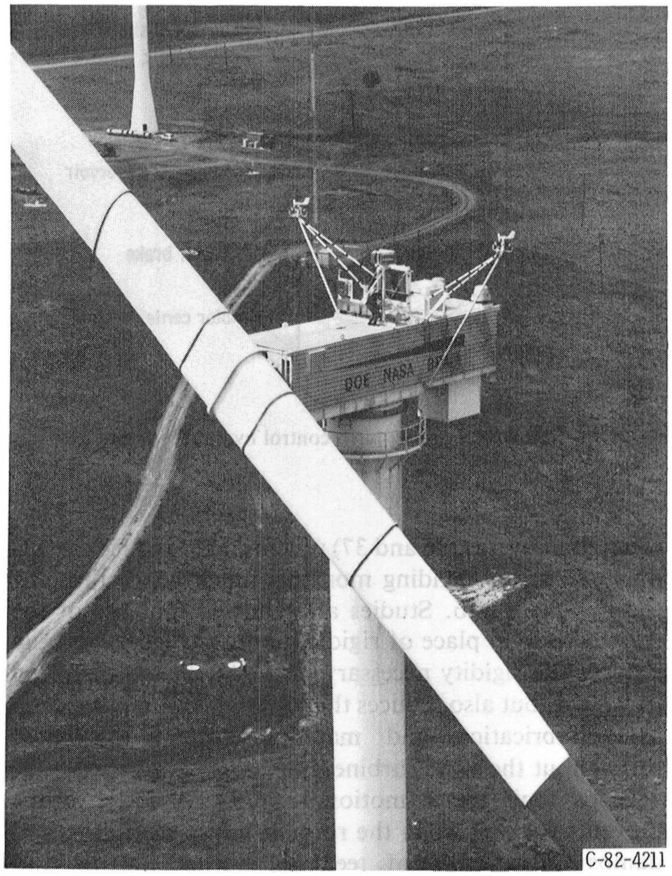

Figure 33. – Mod-2 rotor and nacelle.

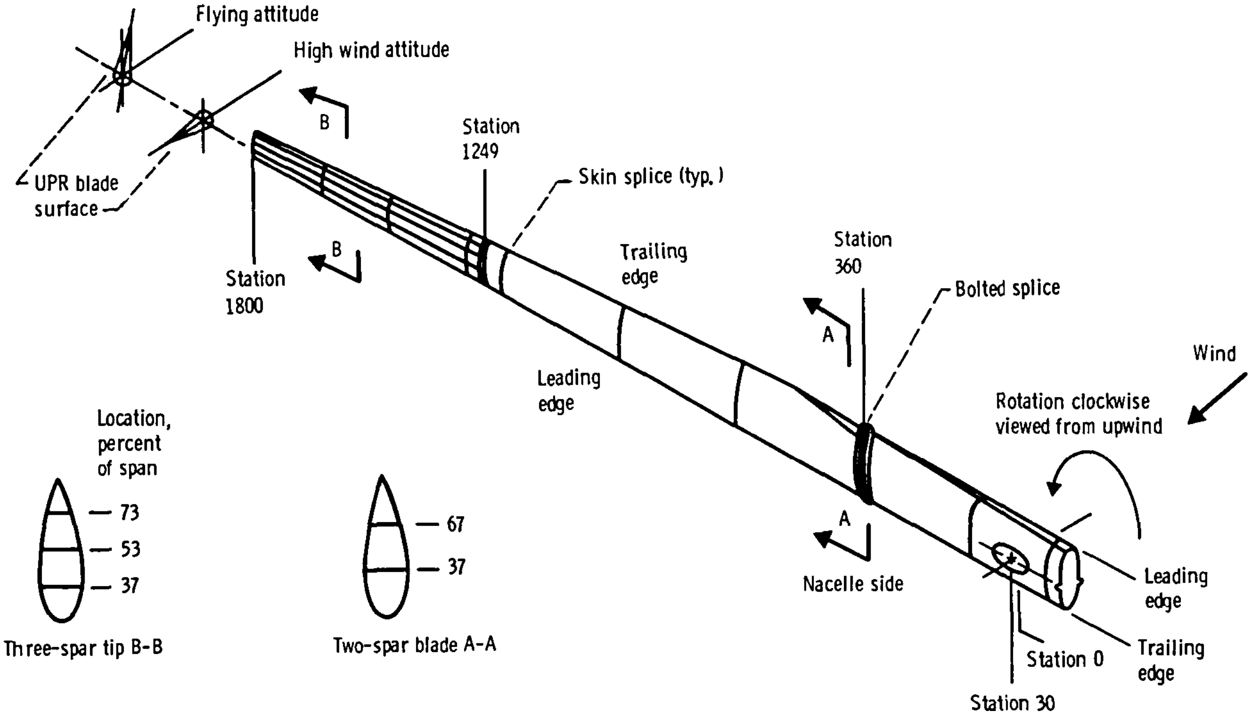

Figure 34. – Mod-2 steel blade configuration.

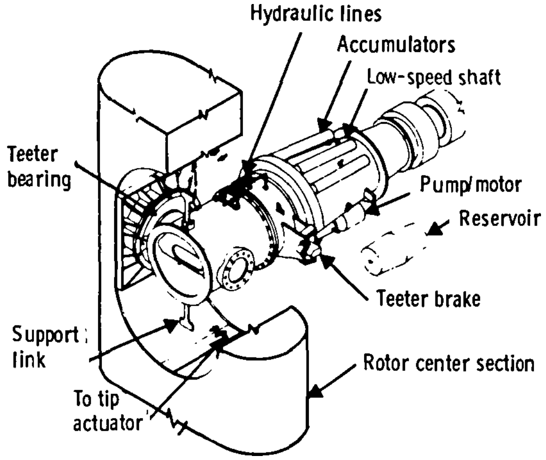

Figure 35. – Mod-2 pitch control hydraulic system.

teetered hub (figs. 36 and 37) was found to reduce out-of-plane vibratory bending moments much below those of the flex-plate hub. Studies also showed that use of the teetered hub in place of rigidly mounted blades not only reduces the rigidity necessary in the blade and therefore its weight, but also reduces the tower and nacelle weights. Thus fabrication and material costs are lowered throughout the wind turbine.

Stops limit teeter motion to 6.5°. A teeter brake prevents rocking when the rotor is not in operation and damps the amount of teetering during starting and stopping.

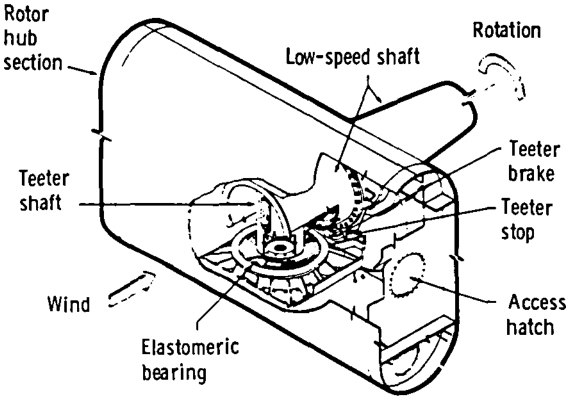

Figure 36. – Mod-2 hub.

Bearings that allow teeter rotation are installed so that each bearing assembly can be removed and replaced without removing the rotor or the low-speed shaft. The rotor teeter bearings and the upwind end of the low-speed shaft are lifted in one piece during assembly. All joints and bolts are sealed to prevent moisture from getting inside the blade. Access to the blade interior for maintenance is possible through sealed hatches.

The hub is constructed as a weldment of three large rolled-plate cylinders (fig. 37). These cylinders are pierced by a smaller cylinder containing the hub bearings. The welded structure reduces construction costs.

Tower. – The tower to support the rotor and the nacelle of the Mod-2 is 59 m (193 ft) high and constructed of cylindrical, seam-welded steel (fig. 38). The upper

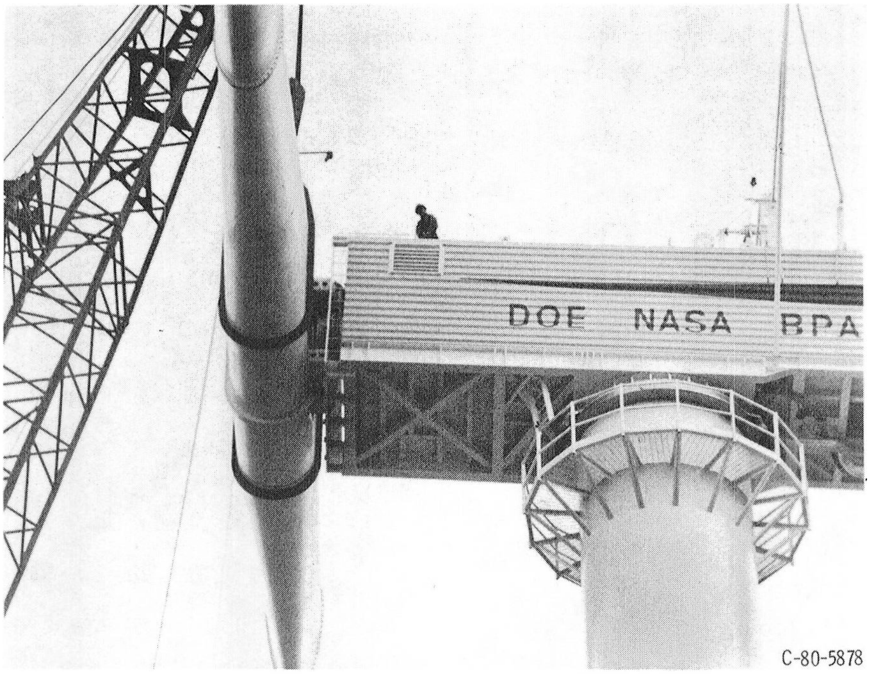

Figure 37. – Mod-2 rotor hub and nacelle during assembly.

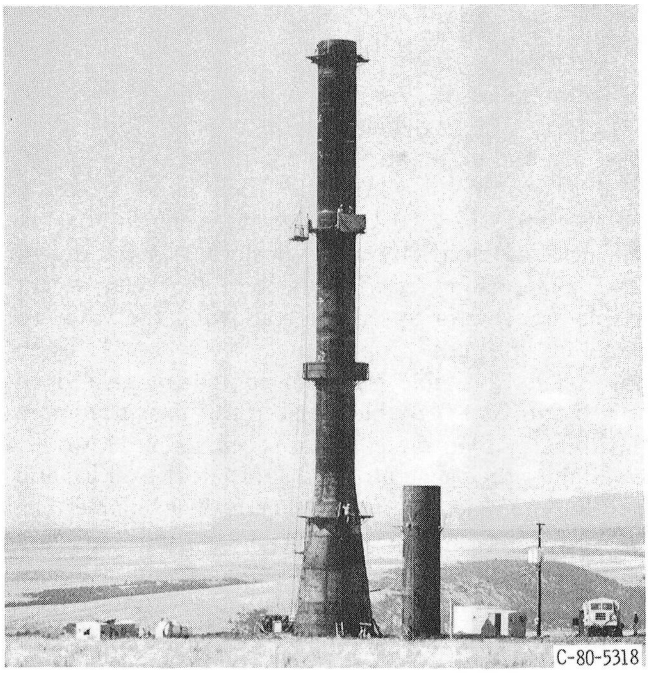

Figure 38. – Mod-2 tower assembly.

portion of the tower is 3 m (10 ft) in diameter and it flares out to 6.4 m (21 ft) at the bottom. It is a "soft" tower, having a natural bending frequency of 1.3 relative to the revolutions of the rotor. It was designed to have a first bending frequency low enough so that the tower and the nacelle can attenuate the two-per-revolution rotor loads.

NASA studies have shown that blade bending moments could be substantially reduced by using soft towers with low aerodynamic drag. Heavy, dynamically stiff truss towers produce a large wind velocity reduction, or "tower shadow," which produces a pulse in a downwind rotor as the blade passes through the tower wake. Blade bending and responses to this pulse in other components of the wind turbine will depend on the amount of damping provided in the various components, the proximity of damping to multiples of rotor speed, and the strength of the tower wake. Providing for damping in the tower and other components, designing the tower so that its natural frequency is significantly different from multiples of rotor speed, and orienting the rotor upwind all help to reduce the vibrating effects and tower shadow. The soft tower also weighs much less, and the shell construction is cheaper to fabricate. Moreover, a soft rather than a rigid tower still permits the use of heavy but economical and reliable rotor designs.

The upwind rotor configuration slightly reduces fatigue and increases annual power production by 2.5 percent while adding little to the cost of the yaw system. The cost of the yaw system is minimized with the teetered rotor.

The tower and foundation are designed for operating load conditions, seismic load requirements, and an extreme wind speed of 55.5 m/s (124 mph) at hub height with the rotor parked. In sandy gravel conditions the tower has a buried octagonal foundation of reinforced concrete. The bus tie contactor and transformer are located on a concrete pad about 30 m (100 ft) from the tower.

Nacelle. – The tower provides access to the nacelle (fig. 39). The nacelle houses the major Mod-2 subsystems, such as the drivetrain, the generator, the yaw bearing and

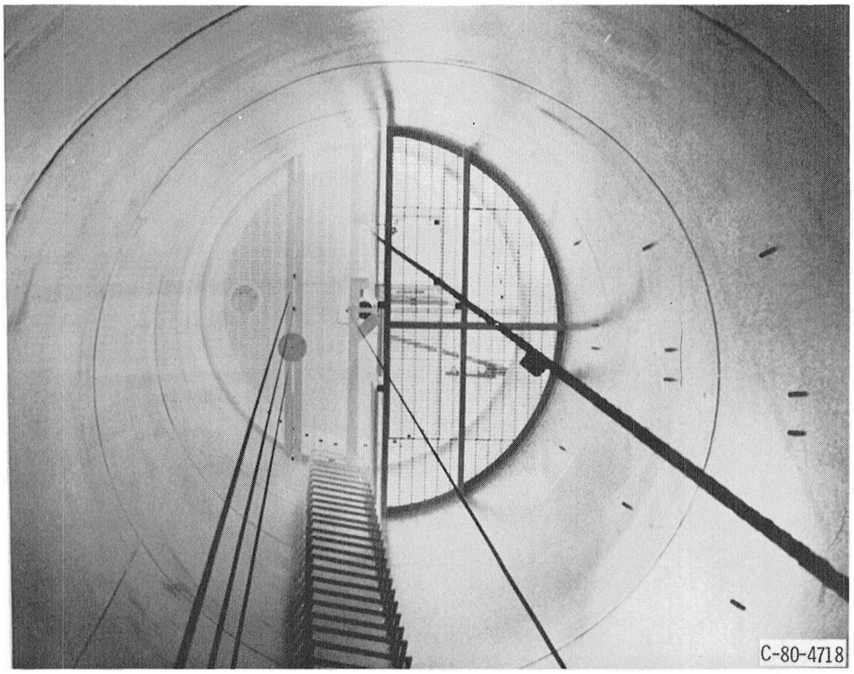

Figure 39. – View up inside of Mod-2 tower up before nacelle installation.

drive, and the hydraulic systems for blade pitch and yaw control (fig. 40). The nacelle also houses other ancillary equipment: the generator cooling system, the nacelle air-circulating system, fire protection equipment, and maintenance equipment.

The nacelle and drivetrain weigh 83 000 kg (183 700 lb). The nacelle is 11.8 m (38.6 ft) long, 2.8 m (9.3 ft) high, and 3.44 m (11.3 ft) wide. It is shipped as one unit, but the gearbox and generator are removed for transportation and the unit is reassembled on location.

The nacelle structure, designed for ease of assembly and maintenance, is a trusswork of welded structural steel overlaid with corrugated steel sheets. The bottom is enclosed with safety-plate walkways. Hatches on both ends and on the top provide access. A fire control system, emergency exits, and nonpowered emergency person-lowering devices are located at each end of the nacelle.

The drivetrain assembly consists of a low-speed shaft, a quill shaft, a gearbox, a high-speed shaft, couplings, a rotor parking brake, and a generator (fig. 41).

The 16 780-kg (37 000-lb) gearbox (fig. 42), manufactured by Stal-Laval Turbine AB, Finspong, Sweden, is a three-stage, epicyclic type, which is smaller, lighter, less expensive, more efficient, and more tolerant of support deflections than a parallel-shaft gearbox with a similar rating. It is flexibly mounted to the nacelle to reduce the effect of nacelle deflections on gear loads. The small gearbox is easy to maintain and can be completely overhauled in the nacelle. The gearbox provides a 103:1 step up from the fixed rotor speed, which increases the fixed rotor speed of 17.5 rpm to the generator speed of 1800 rpm. It provides rotor-to-generator speed conversion and drives auxiliary equipment.

The generator (fig. 43) is a synchronous electrical generator rated at 2500 kW. Two different approaches for generating electricity were considered in the design phase: adapting an electrical system that can accept variable shaft rotor speed; and allowing the rotor to operate at a speed proportional to the wind, using commercially available electrical equipment at a fixed rotor speed. The variable-speed rotor provides more annual energy than the constant-speed rotor. However, the variable-speed generator and associated electrical and electronic equipment are not commercially available. The fixed-rotor-speed system was selected for Mod-2 to avoid the potentially high costs and schedule uncertainties associated with the development of a variable-speed generator system.

The rotor torque is transmitted to the gearbox through a "soft" quill shaft. It is designed to reduce the two-per-revolution rotor torque fatigue effects at the gearbox and to improve the power quality of the generator output.

Yaw system. – The yaw system, located between the nacelle and the tower, rotates the rotor and the nacelle into the wind and holds them in position as commanded by the yaw control system. The yaw assembly turns the rotor into the wind at a rate of 0.25 deg/s. The control system holds the heading within a few degrees of the long-term average wind direction, which minimizes power losses due to rotor heading error. Thirty-second

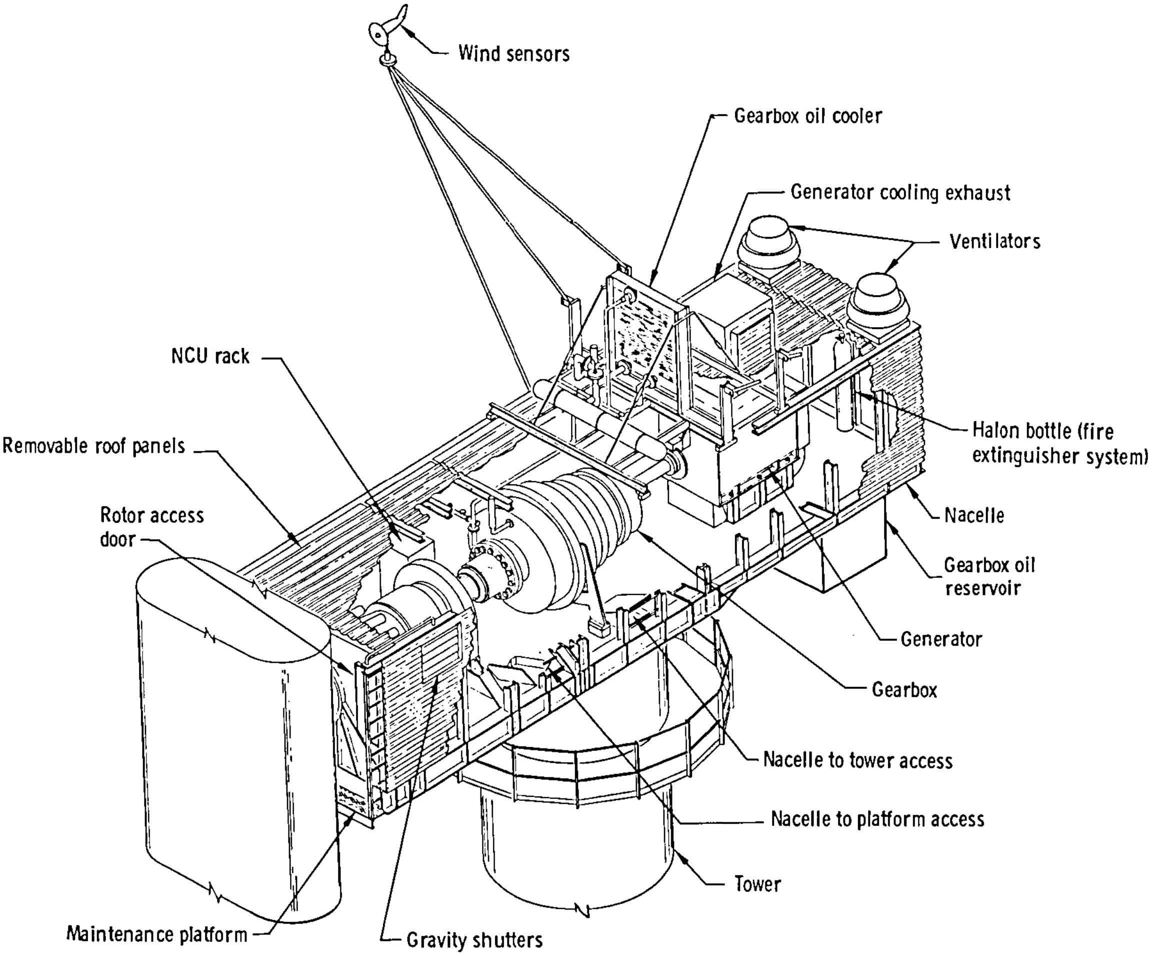

Figure 40. – Mod-2 nacelle and rotating equipment.

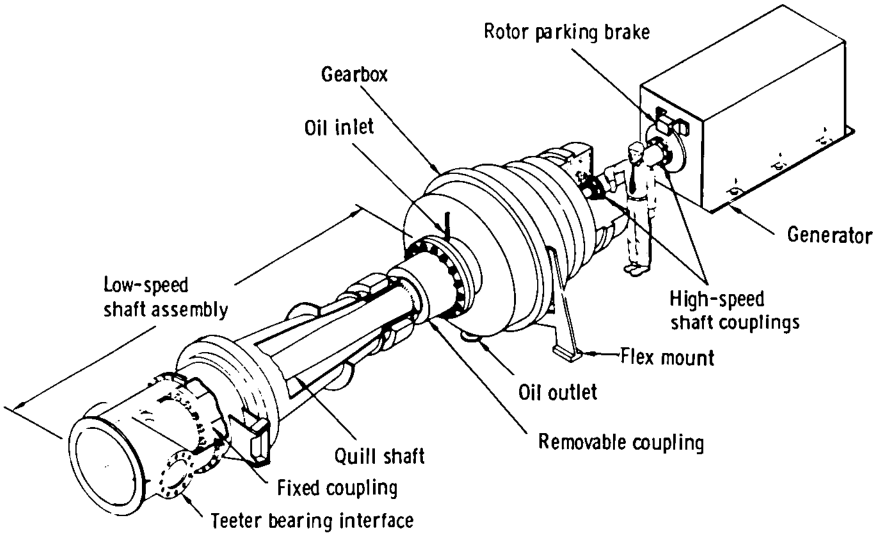

Figure 41. – Mod-2 drivetrain assembly.

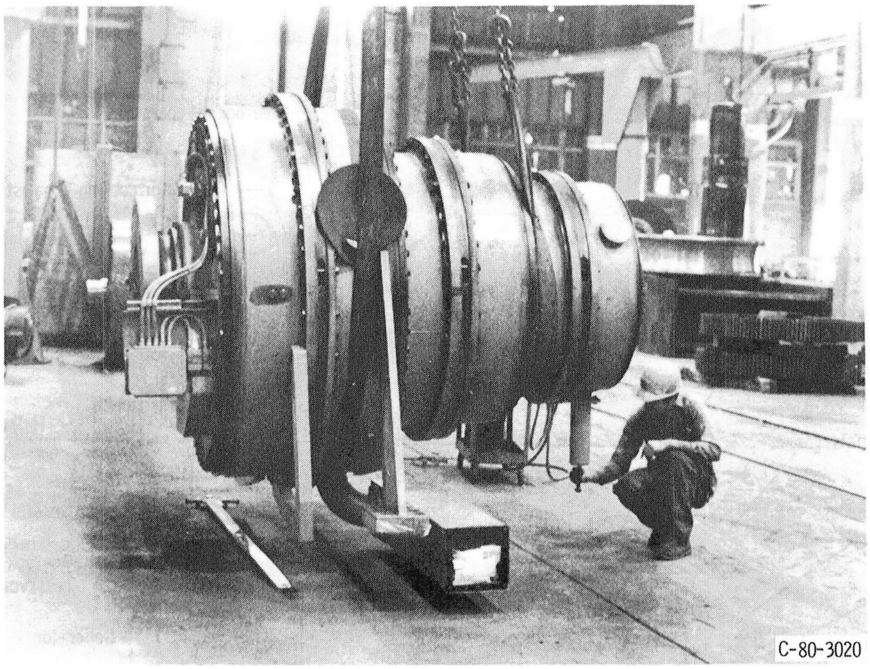

Figure 42. – Mod-2 epicyclic gearbox.

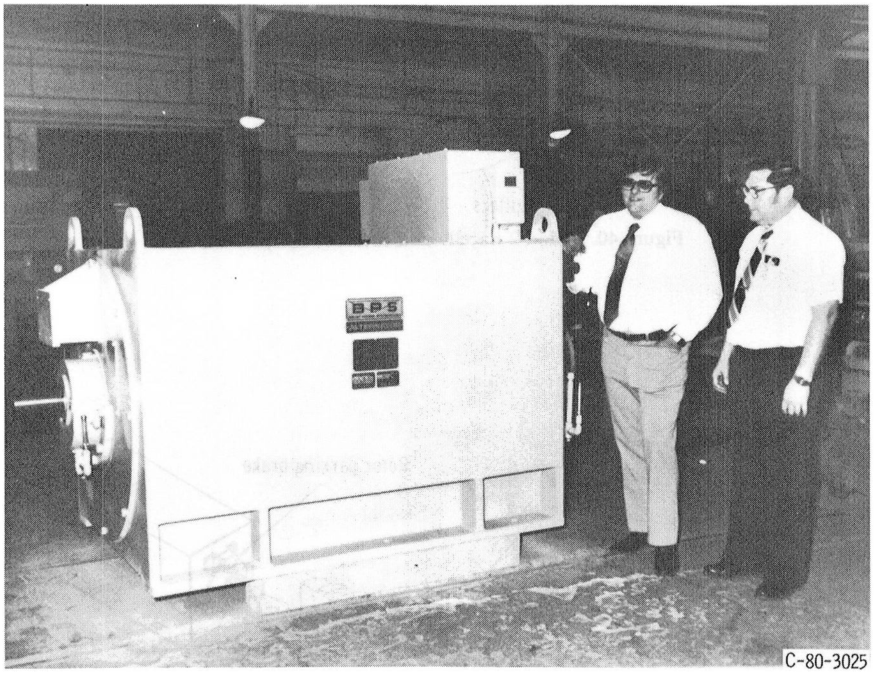

Figure 43. – Mod-2 synchronous generator.

average wind excursions are monitored. The control system changes the heading whenever these exceed 20° to avoid extreme blade loads.

A hydraulic brake damps yaw motion and six additional brakes prevent inadvertent yawing. The yaw brakes are spring actuated and hydraulically released. This insures that brakes will be applied if there is a hydraulic failure.

The yaw drive system and brakes are powered by the 14-kg/cm^2 (2000-psi) hydraulic system. Because the hydraulic system is mounted in the nacelle, there is no need for rotating hydraulic joints between the nacelle and the tower.

The drive pinion and shaft are protected from overload and subsequent mechanical damage by a shear pin arrangement. All yaw brakes are easily accessible for inspection and disk pad replacement. The entire system is shielded from weather and dust.

Control system. – The control system provides the sensing, computation, and commands necessary for unattended operation of the Mod-2 wind turbine. The controller is a microprocessor located in the nacelle control unit. As in previous designs, it initiates startup; monitors wind conditions, rotor speed, power, and equipment status continuously; and shuts down the wind turbine under adverse conditions.

The software for the controller occupies about 12 000 bytes of programmable read-only memory. There are an additional 4000 bytes of random-access memory for operational and historical data storage. The software control cycle rate is 10 Hz, which provides a 1-Hz response digital feedback control to the blade pitch system. Each program cycle also samples all sensors, schedules the proper operating mode, and generates commands to control nacelle orientation with respect to the wind.

A control panel and a display terminal are located in the tower base to provide operating and fault data as well as manual control for maintenance. A remote terminal at the utility substation provides data and limited control of Mod-2. In the event of computer system failure, Mod-2 will be shut down by an independent fail-safe system.

Safety considerations are an integral part of the wind turbine program (ref. 24). Designed to operate in the temperature range −40° to 42° C (−40° to 105° F), Mod-2 can withstand loads associated with a maximum steady wind speed of 53.6 m/s (120 mph) at the 9.1-m (30-ft) reference elevation. However, the wind turbine must face other environmental threats including seismic disturbances, impacts of various projectiles, transportation and handling, lightning, and hail. When in soil conditions appropriate to the site, the wind turbines are designed to withstand zone 2 seismic disturbances. The blades, nacelle, and tower are designed to withstand impact of a 1.8-kg (4-lb) projectile at 16.5 m/s (35 mph). This assures that the wind turbine will not be damaged from the impact of 2.5-cm (1.0-in.) diameter hailstones with 20.3-m/s (66-ft/s) terminal velocity. A wind turbine must also withstand lightning strikes without major structural or electrical damage.

The wind turbine's structural components are designed for loads of 102 kg/m^2 (21 lb/ft^2) of snow on the rotor blade when parked horizontally and 200 kg/m^2 (41 lb/ft^2) of snow on the nacelle roof. A 5.1-cm (2-in.) coating of glaze ice should not affect the structural components.

All parts of the Mod-2 structure not designed to fail-safe strength criteria meet safe-life strength criteria. Safe-life is a structural concept that requires that the structure sustain no failure during its service life. The tower is designed so that one failure or any malfunction degrading performance will not create hazardous or catastrophic conditions.

The Mod-2 cluster research tests have a number of primary objectives (ref. 12). Information is needed by utility companies and manufacturers on one-, two-, and three-machine operation. It is important to know how single or multiple machines may affect the quality of electricity delivered to the utility customer. Experiments will be conducted to assess the relation between performance and physical spacing of machines. The time and types of personnel needed to maintain machine operation will be investigated. Environmental issues such as potential television interference and acoustic noise will be evaluated. Finally one of the machines will undergo systematic modifications to improve and verify overall machine performance. In addition, the data gathered as a result of this research will be used for studying the advantages of larger clusters of wind turbines.

For example, by learning how three machines in a cluster perform, projections can be made on how 20 or more machines would best be spaced on a single tract of land.

Component Research and Technology

Rotor Blade Development

The development of rotor blades by NASA has been a major effort motivated by the fact that this component was the highest cost subsystem in the first generation of wind turbines. Of primary importance then for economical design are the materials used for blade construction and blade fabrication techniques. The NASA low-cost-blade project investigated a variety of rotor blade sizes, materials, manufacturing methods, and rotor control systems. Rotor designs involve a number of considerations including the need to establish the rotor diameter, the number of blades, the mode of operation, and the method of rotor speed and torque regulation. All affect the cost of a wind turbine. For example, a three-blade rotor was compared with a two-blade rotor. The study concluded that even though a three-blade rotor produces more power than a two-blade rotor of equal diameter, the two-blade rotor provided power at lower cost because it was so much more economical to manufacture. So two-blade rotors were used. Rotor power or speed control is required to limit the rotor torque when wind speeds exceed the design or rated wind speed. This control is needed to prevent overloading of mechanical components such as the gearbox and electrical equipment such as the generator. Allowing rotational speed to vary with wind speed makes the blade design more economical since the pitch angle of the blade can remain in a fixed position. However, for standard constant-frequency power-generating equipment, a constant-speed drive to the generator is required. Thus constant rotational speed is desirable, but this requires the pitch angle of the blades to be changeable. Pitch change mechanisms obviously complicate blade design and increase cost. Torque can be regulated in several ways. Full- or partial-span blade pitch change can be used, or ailerons extending over the outboard portion of each blade can be applied to control rotor torque.

Early wind turbine projects used aluminum blades with construction similar to that used for aircraft wings. Although this approach used existing technology, it was found to be too costly. So other materials and fabrication techiques were applied. Blades were constructed of fiberglass composites, wood-epoxy composites, or steel. All blade material types have been evaluated for fatigue failures by using blade specimen testing techniques and routine inspections of full-scale rotors on operating wind turbines.

The technology of filament or tape winding of fiberglass composites has been applied advantageously to rotor blade designs. Fabrication of very large blades, 45.7 m (150 ft) in length, has been demonstrated. Fiberglass blades have been built and installed on several horizontal-axis machines including the Mod-0A and the WTS-4. Wood-epoxy composite blades 18.3 m (60 ft) long have been built and have operated on three Mod-0A machines. Layups of wood veneer, fiberglass, and epoxy are formed in molds to make half of one blade. The two blade halves are then bonded together to form the complete rotor blade.

Blades made primarily of steel have also been built and tested in the low-cost blade development program. A unique low-cost construction using steel has been advanced by NASA Lewis. A 18.3-m (60-ft) blade was built using a tapered, tubular steel utility pole as the primary structural member. The blade contour was formed by wood ribs fastened to the pole. Blocks of plastic foam formed the leading edge. The entire outer surface was wrapped with fiberglass cloth and then treated to shrink the material tight over the ribs and foam surfaces. These so-called utility pole blades (fig. 44) have been extensively used on the Mod-0 machine to conduct a variety of experiments.

Although low-cost construction is an important goal, long blade life is essential to economical wind energy conversion. A quick estimate of expected blade life can be derived by fatigue testing (fig. 45). The blade portion that receives the greatest loads in most blade designs is where the blade attaches to the machine at the hub. Thus only that section of a blade need be tested. The actual loads and load cycles applied to the test blade are derived from known wind characteristics such as wind gusts and loads during machine shutdowns in high winds or in

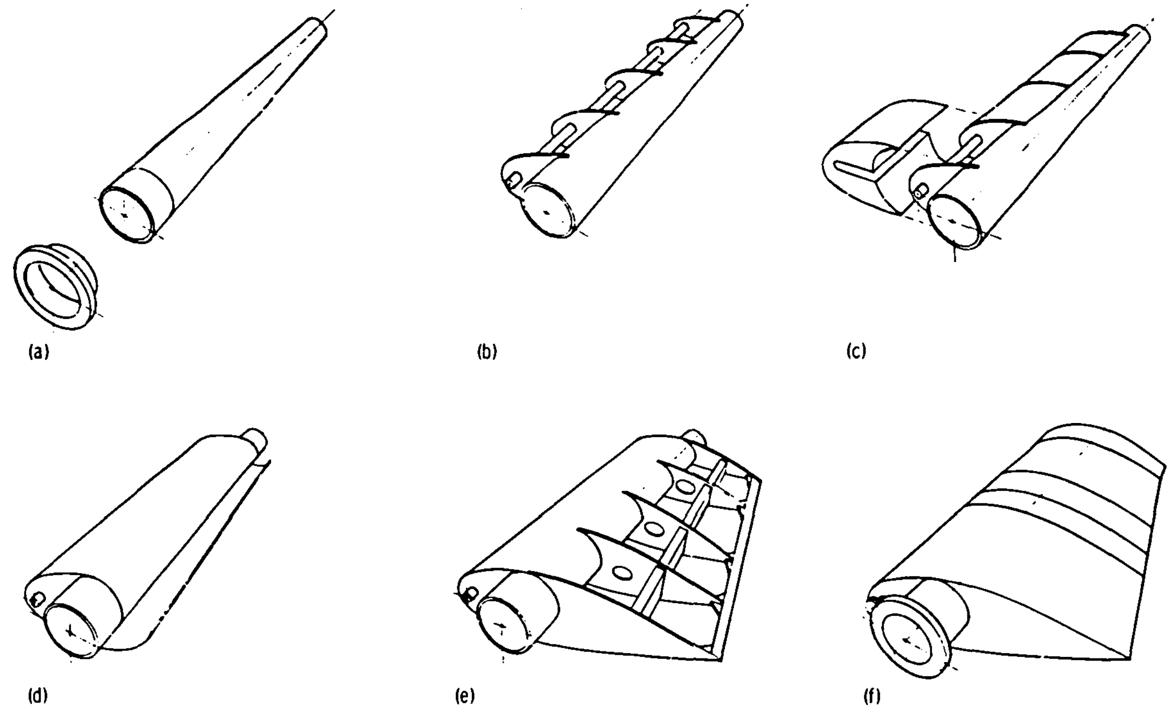

(a) Prepare spar.
(b) Install leading-edge ribs and weight tube.
(c) Install form.
(d) Wrap fiberglass
(e) Install trailing-edge ribs.
(f) Apply razorback and paint.

Figure 44. – "Utility pole" blade fabrication steps.

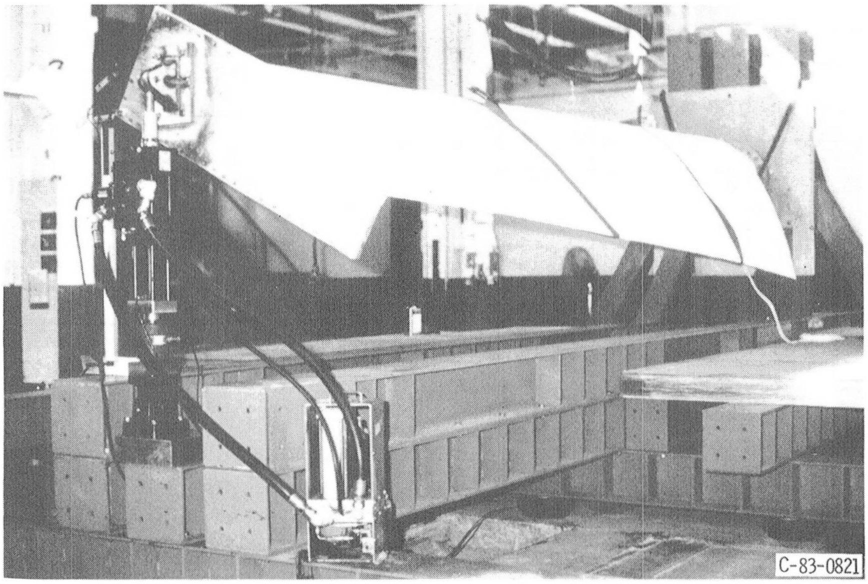

Figure 45. – Aluminum blade root end installed for fatigue testing.

emergencies. Fatigue testing has demonstrated its importance to blade life. As a result, both the wood and fiberglass blades for the Mod-0A machines in Hawaii and New Mexico have by far exceeded the operational life of the original experimental aluminum blades with much less maintenance.

Rotor blade development for large horizontal-axis wind turbines began at NASA Lewis in 1974. Design studies of 50- to 3000-kW wind turbines for electric utility applications were started by both the General Electric Company and the Kaman Aerospace Corporation (fig. 46). At the same time, the Mod-0 wind turbine for the Federal Wind Energy Program was being designed and constructed by NASA Lewis. Airplane-wing-like aluminum rotor blades 18.3 m (60 ft) long were selected for the Mod-0. Existing aircraft wing and helicopter rotor blade technology was applied to the design and fabrication of the Mod-0 aluminum blades. This approach allowed delivery to NASA of three completed blades within 8 months from the start of design. This very short blade development time and delivery schedule was a major factor that allowed first rotation of the Mod-0 machine in September 1975 at the NASA Plum Brook Station. Measured operating loads on the blades exceeded the design loads during initial Mod-0 tests. As a result overall modifications were made to the machine to reduce the blade operating loads to acceptable levels. Lockheed, the builders of the original blades, proposed structural modifications to the Mod-0 blades. These modifications were applied to the design of the aluminum blades for the Mod-0A machine. The chronology of the aluminum blade development is shown in figure 46.

Although the Mod-0A blades were identical in size to the Mod-0 blades, they were capable of generating twice as much power. Improvements learned from the experimental Mod-0 permitted this increased capability. The first three Mod-0A machines provided wind energy for electric utilities by using aluminum blades. Experience from operation of these blades on the first two machines was used to improve the aluminum blades installed on the third (Block Island) unit. The set of aluminum blades for the Block Island machine were the last built. Each 18.3-m (60-ft) long, 1070-kg (2360-lb) blade cost over $45/kg ($100/lb), making the blades the most expensive key component on each machine. As a result NASA began to investigate the feasibility of building lower cost blades.

The Kaman and GE design studies (refs. 2 and 3, respectively) of large horizontal-axis wind turbines concluded in 1975, and both companies strongly recommended that fiberglass rotor blades should be developed by using automatic, fiberglass filament-wound fabrication techniques. Fiberglass composites have the properties needed for wind turbine blades: high strength-to-weight ratio, good fatigue strength, and resistance to the environment. Automated fabrication techniques used with composites had the potential for much lower manufacturing costs than those for the aluminum blades.

The chronology of fiberglass blades is also shown in figure 46. Two types of fiberglass filament-wound processes were developed for blade fabrication; a continuous filament process and a process that uses transverse filament tape (TFT). Faster application and ability to taper thickness are advantages of the TFT process over continuous filament winding. Also, there is considerable experience with the TFT process in the extensive fabrication of fiberglass tanks and pipes used in the chemical industry.

An 18.3-m (60-ft) long Mod-0 blade was designed and constructed by using continuous-filament-wound fiber-

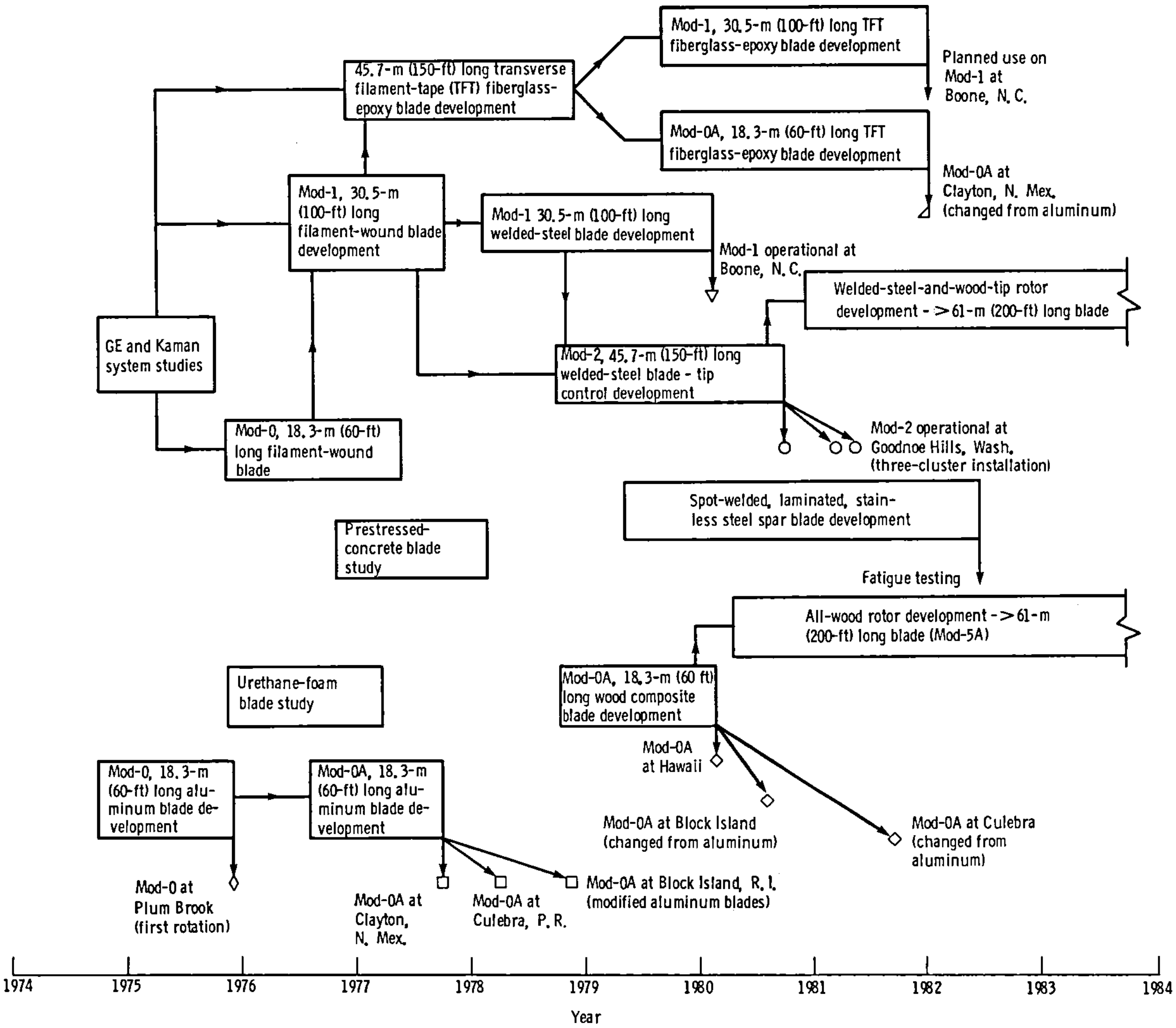

Figure 46. – Chronology of rotor blade development—large horizontal-axis wind turbine projects.

glass and epoxy. Hamilton Standard Division conducted the design and Allegany Ballistics Laboratory successfully fabricated one blade, shown in figure 47. In static testing the 18.3-m (60-ft) long filament-wound fiberglass-epoxy composite blade satisfied all design requirements (ref. 25). This led to the development of a 30.5-m (100-ft) long filament-wound fiberglass-epoxy composite blade for the Mod-1 wind turbine. The development plan for the fiberglass-epoxy blades for Mod-1 called for winding a 30.5-m (100-ft) tapered cylindrical tube, or "demonstration spar," before the start of actual blade fabrication. The tapered fiberglass-epoxy composite cylindrical tube was wound on a rotating steel tube, or mandrel, to demonstrate the fabrication procedure planned for the actual blade. The steel mandrel was used to support the spar and provide its tubular shape during the wet-filament-epoxy winding process. During winding of the demonstration spar the rotating steel mandrel incurred a structural failure. When the mandrel failed, it also caused fracturing of the fiberglass-epoxy demonstration spar. Additional funding and time were needed to correct this problem. Rather than expend further resources to develop fiberglass-epoxy blades for the Mod-1 at that time, it was decided to develop 30.5-m (100-ft) long, all-steel blades (fig. 48). The Boeing Engineering and Construction Company was competitively selected to develop the Mod-1 steel blades and deliver them to the Boone, North Carolina, site. This effort was successfully accomplished within the Mod-1 project schedule, and the machine started experimental operation in July 1979.

The potential blade fabrication economies of using fiberglass-resin composite materials led to finding an existing fabrication technique that used composite fiberglass filaments bonded to tape approximately 25 cm (10 in.) wide. This material was used and is currently

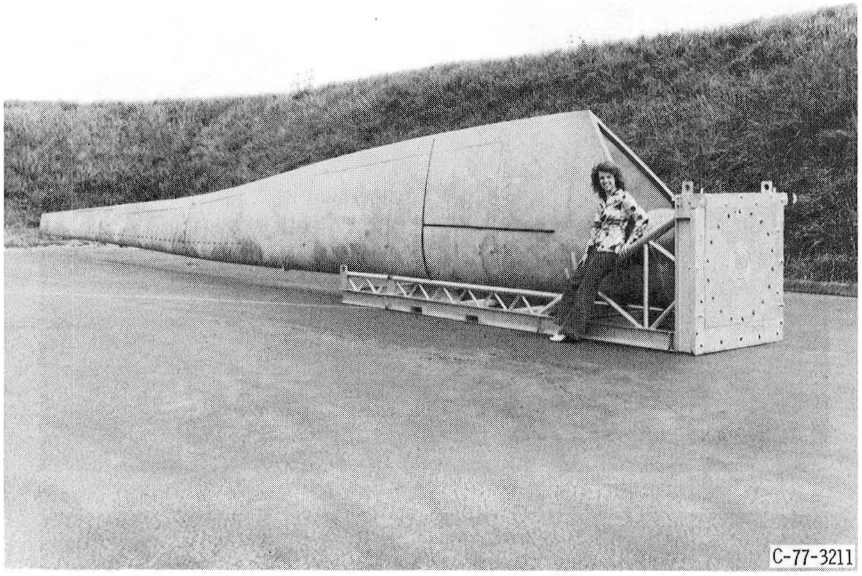

Figure 47. – Mod-0, 18.3-m (60-ft) filament-wound fiberglass-epoxy blade.

being used to fabricate cylindrical fiberglass pipe for the chemical and agricultural industries. As a result, an experimental 45.7-m (150-ft) long fiberglass blade was designed and fabricated by applying the transverse-filament-tape (TFT) winding process. The 45.7-m (150-ft) long blade shown in figure 49 was developed for potential use on the Mod-2 wind turbine. Kaman Aerospace Corporation, with expertise in helicopter rotor blades, designed and assembled the blade (ref. 26). Structural Composites Industries (SCI), under contract to Kaman Aerospace Corporation, wound the main blade spar by using transverse-filament fiberglass tape and the TFT winding process. The blade underwent structural tests that proved the adequacy of the design and the fabrication process (ref. 26). After the experimental 45.7-m (150-ft) long blade project was completed, Kaman designed and fabricated two experimental 30.5-m (100-ft) long blades of TFT for the Mod-1 machine (fig. 50) (ref. 27). As a result of their efforts on the 45.7-m (150-ft) experimental blade, SCI was competitively selected to design and fabricate a set of 18.3-m (60-ft) long TFT composite blades (fig. 51) for the Mod-0A machine at Clayton, New Mexico. The SCI blades (ref. 28) were installed on the Clayton Mod-0A machine in August 1981 and successfully operated for over 3000 hours before the machine was shut down in June 1982.

The Hamilton-Standard Division of United Technologies fabricated and installed the fiberglass blades used on the WTS–4 system verification unit now in operation near Medicine Bow, Wyoming. The blades that make up the 78-m (256-ft) diameter WTS–4 rotor are a result of their earlier work to develop the technology for filament-wound fiberglass-epoxy composite blades for the Mod-0 and Mod-1 wind turbines.

Welded steel is used to construct the entire Mod-2 rotor blade. The 91.5-m (300-ft) diameter rotor consists of a 18.3-m (60-ft) long center hub section, two 22.9-m (75-ft) midsections bolted to each side of the center section, and two 13.7-m (45-ft) movable tip sections bolted to the ends of each midsection. When the first Mod-2 began operation in October 1980, the rotor was the largest ever built for a wind turbine (fig. 52).

Even larger rotors having diameters of 122 m (400 ft) or more are being designed for the advanced wind turbines, which will produce 7 to 8 MW of rated power. Both welded-steel and all-wood rotors are being considered for these machines.

Development of laminated-wood–epoxy composite blades was started in 1978. By mid-1980, wood blades were producing power on the Hawaii Mod-0A machine. In July 1980, the Block Island Mod-0A machine was changed from aluminum to wood blades. Later the Culebra Mod-0A machine also was changed from aluminum to laminated-wood composite blades.

The wood blades are fabricated by molding the blade in two halves. Douglas fir veneers 0.16-cm (1/6-in.) thick are contoured and laminated with epoxy resin into the mold. The forward section of the blade is designed to be the load-carrying D-spar (fig. 53(a)) when the two half-shells are epoxy bonded together. Aft sections of the blade are built of plywood internally stiffened with epoxy-impregnated paper honeycomb (ref. 29). From the standpoint of low cost and good operational experience, wood blades constructed in this manner are appealing to

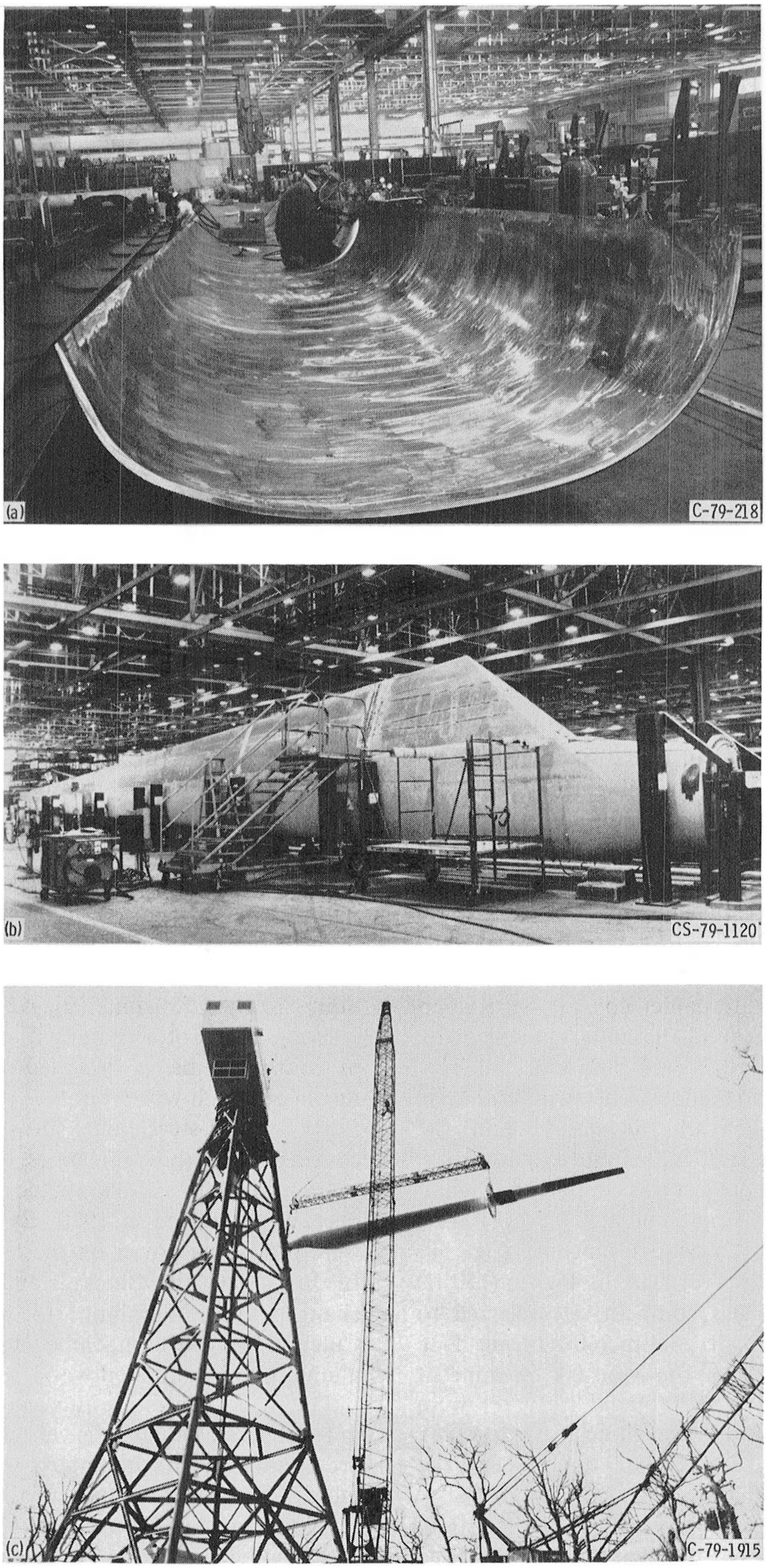

(a) Section of steel D-spar during blade fabrication.
(b) Mod-1 steel blade during final assembly.
(c) Mod-1 steel blade during machine assembly at Boone, North Carolina.

Figure 48. – Mod-1, 30.5-m (100-ft) long blade.

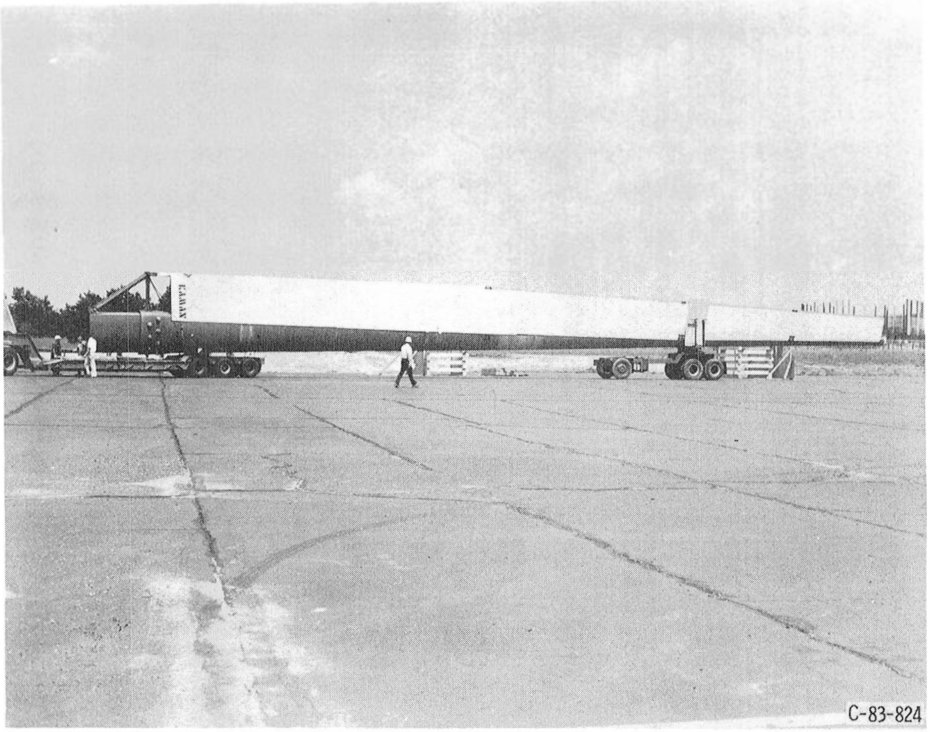

Figure 49. – Experimental fiberglass blade, 45.7 m (150 ft) long.

designers for wind turbine blades much larger then the 18.3-m (60-ft) Mod-0A blades.

Of particular concern in blade design is the ability of the root end of the blade, the section near the hub, to transfer fatigue loads from the main spar section into the hub section. This area is where blade bending moments are the greatest. In wood blades a transition must be made at this section from wood to steel. Steel studs are embedded in the laminated wood (fig. 53) and are used to attach the blade to the steel hub. In the development program for wood blades, extensive fatigue testing was conducted on the root end portion of the blade. Several designs of stud attachments to the wood were required before satisfactory fatigue test results were achieved.

After over 7800 hours of operation of the wood blades on the Mod-0A machine in Hawaii, a broken stud was discovered at the base of the tower. A review team later determined that corrosion of the stud was the probable cause of the stud breaking. It was one of the 24 studs that were used to attach the wood blade to the metal adapter, which in turn was bolted to the hub. Alternative stud materials that will reduce deterioration by corrosion are being investigated for possible use.

While blades of aluminum, fiberglass, steel, and wood were being built and tested on operating wind turbines, other concepts were being studied and some blade specimens were built for fatigue testing. During the period 1976–77, the feasibility of a blade made entirely of urethane foam materials was studied by Concept Development Institute (ref. 30). Attractive features are low material costs and potential for automated fabrication processes. But the poor strength properties of the foam materials that were considered would have required considerable reinforcing of the urethane with steel rods and plates. Further development of this concept is necessary before a practical full-scale prototype blade can be fabricated for experimental testing.

Prestressed concrete has many of the attractive features of urethane. Concrete is inexpensive and easily molded and can be prestressed. This led to a feasibility study by the Tuthill Pump Company (ref. 31). As a result of the study the concrete blade weight was estimated to be about twice that of an aluminum blade for a Mod-0A machine. Blades as heavy as these would impose design changes on other turbine components such as the rotor bearings and tower structure. Although the potential for low cost is attractive, this concept is not considered to be competitive with other designs because of the comparatively high blade weight.

Another cost-competitive steel spar design was developed by the Budd Company and a blade section was built for fatigue testing, (fig. 54(a)). Instead of a contoured (D-shaped) load-carrying spar, the design uses a box-beam spar built with flat sections of spot-welded laminated sheets of stainless steel. The airfoil contour is formed by bonding plastic foam to the box beam and covering it with an outer skin of polyester resin and fiberglass (fig. 54(b)). Fatigue testing of the spar, shown in figure 54(a), was begun in 1982. Early in the test, a crack developed in the experimental spar. The test results

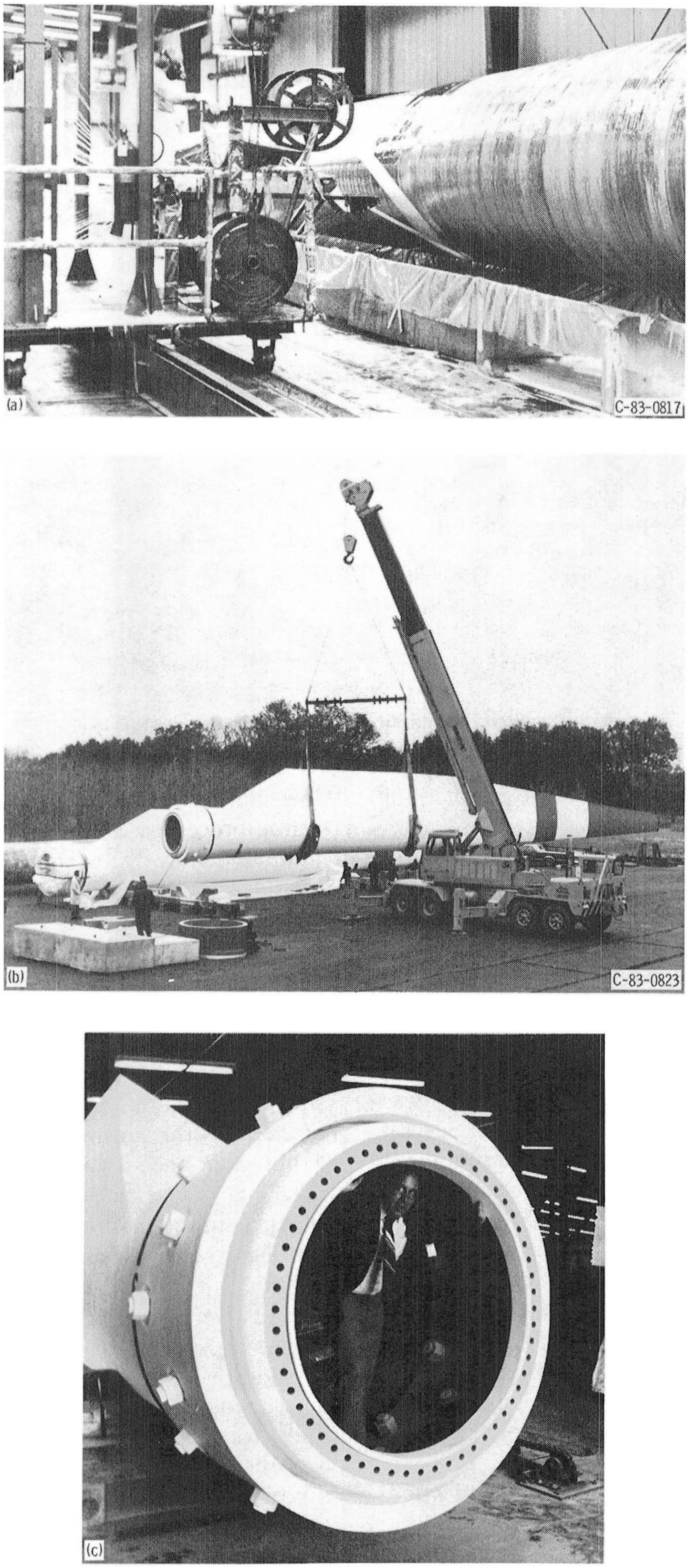

(a) Transverse-filament-tape winding of blade spar.
(b) Two 30.5-m (100-ft) long blades.
(c) Blade root end that mates with hub of wind turbine.

Figure 50. – Mod-1 fiberglass-epoxy blade during fabrication at Kaman Aerospace Corp.

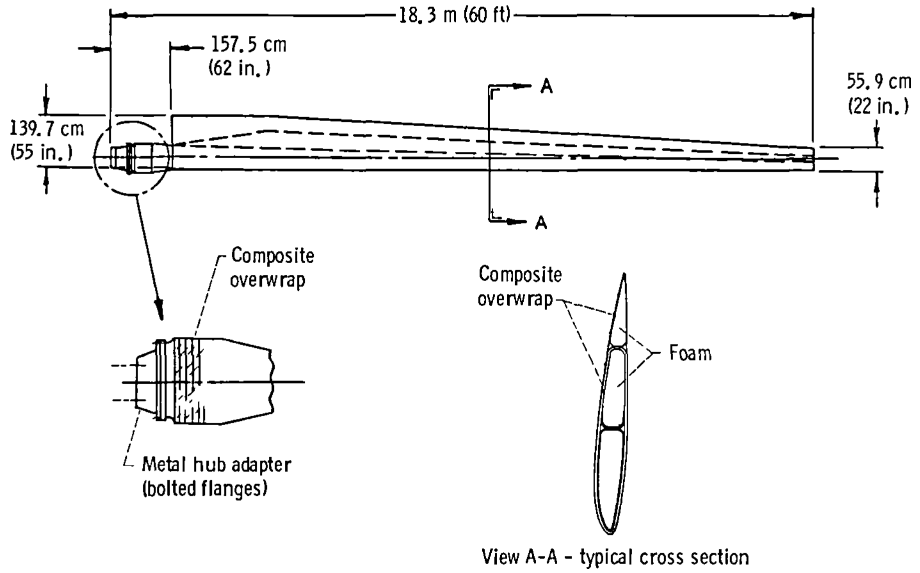

Figure 51. —Schematic of Structural Composites Industries 18.3-m (60-ft) long Mod-0A fiberglass-epoxy composite blade.

were reviewed and testing was terminated since adequate data were obtained on this concept.

Rotor Blade Control Surfaces

Variable pitch of rotor blades on large horizontal-axis wind turbines is used to control the rotational speed (rpm) and the electricity generated and for starting and stopping blade rotation. Pitch angle variation of a rotor blade is the partial turning, usually up to about 90°, of the blade about the spanwise axis. Thus the full span of the blade can turn more or less into the wind depending on the speed of the wind and the rotational speed of the rotor. However, because of the size and weight of large turbine blades, full-span pitch controls are more complex and more expensive to build and maintain than other methods of controlling the rotor.

A fixed-pitch rotor is a rotor having blades that are designed not to turn about the spanwise axis. Fixed-pitch rotors offer advantages over variable pitch. Pitch change mechanisms are eliminated. Also, by proper orientation of the fixed-pitch rotor, cyclic stresses in the blades are reduced. Additional stress reductions can be obtained by combining a fixed-pitch rotor with a teetering hub. Fixed-pitch blades allow continuous construction through the hub, which reduces the problem of attaching each blade separately to the hub. This becomes a structural benefit in very large rotors such as the 91.5-m (300-ft) diameter rotor for Mod-2. However, there are two inherent problems with fixed pitch: no startup or shutdown capability, and no control of rotational speed, particularly overspeed protection. Yawing of the rotor can be used for startup, but yaw control is not fast enough to prevent overspeeding.

Efficient wind turbines start turning at the lowest wind speed at which generating power can be useful. This is called the cut-in wind speed. Also, wind machines are stopped from rotating (cutout wind speed) when the wind velocity gets so high that some components would become overloaded. Rotors can be started aerodynamically by using blade pitch control. Blades are pitched into the wind at the proper angle to produce enough torque for turning, and then the blade pitch angle is decreased as rotor speed is increased. With fixed-pitch blades other means are used for starting, such as yawing the rotor away from the wind or driving initial rotation with mechanical starters. Rotor blades can also be stopped by increasing the pitch angle until the rotor blades are "feathered" (leading edge of airfoil facing directly into the wind with the upper front and lower airfoil back surfaces parallel to the wind flow). Without this protection runaway rotor speeds can result from high wind gusts, or by loss of load when the turbine is electrically disconnected from the utility network.

Variable blade pitch control is also used to maintain constant rotor speed with varying wind speed. This is necessary to generate constant-frequency power for an electric utility if a fixed-speed direct drive is used from the rotor to the generator. More complicated variable-speed, constant-frequency generating systems can be used that would allow the rotor speed to vary with the wind speed. Most large wind turbines are designed to provide a rated output of electricity at a particular (or rated) wind speed. When wind speed exceeds the design (or rated) wind speed, the blades must dump power by aerodynamic means such as increasing the pitch angle and thereby partially stalling the blades. Increased power output is thus sacrificed. In fact, the Mod-0 wind turbine rated at

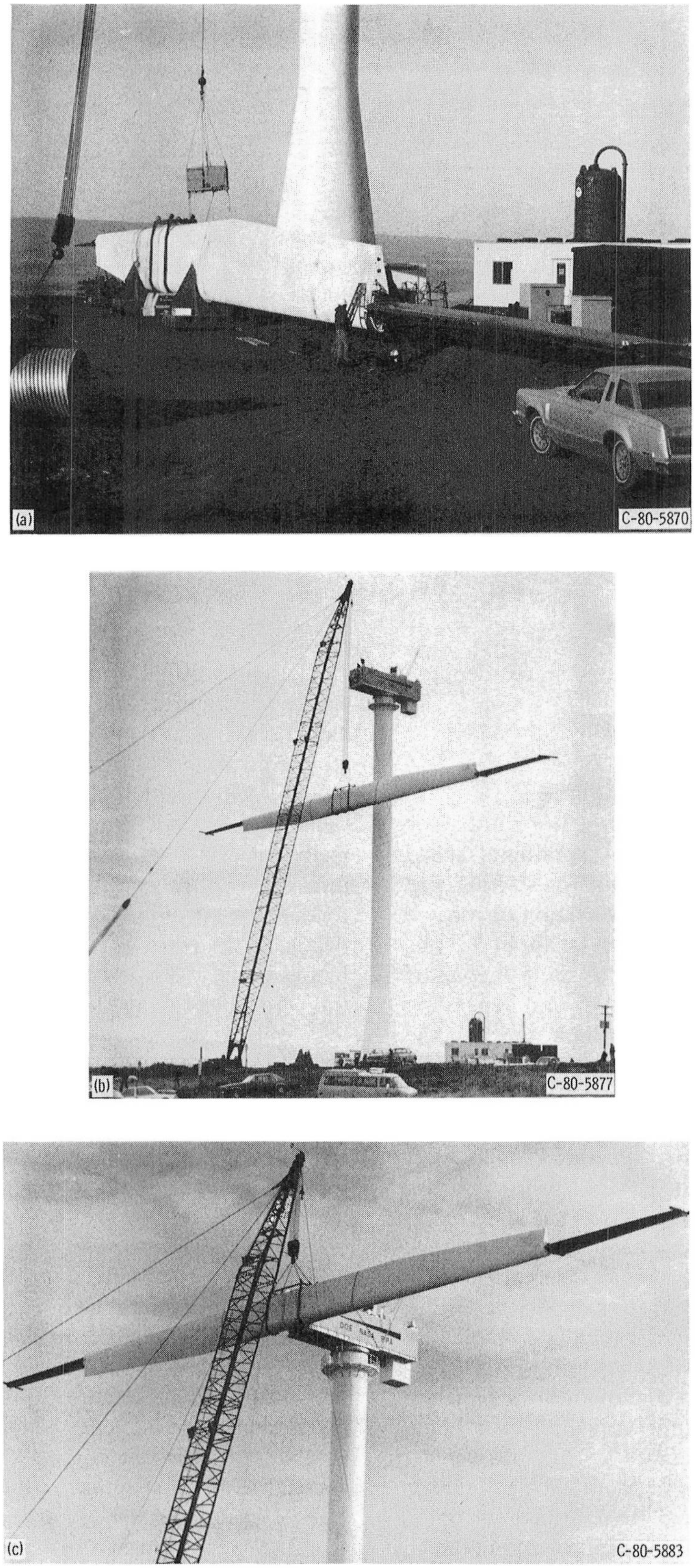

(a) During preparation for assembly with low-speed shaft.
(b) During assembly.
(c) Blade being mated with hub.
Figure 52. – Mod-2, 91.5-m (300-ft) long, welded-steel rotor during assembly at Goodnoe Hills, Washington.

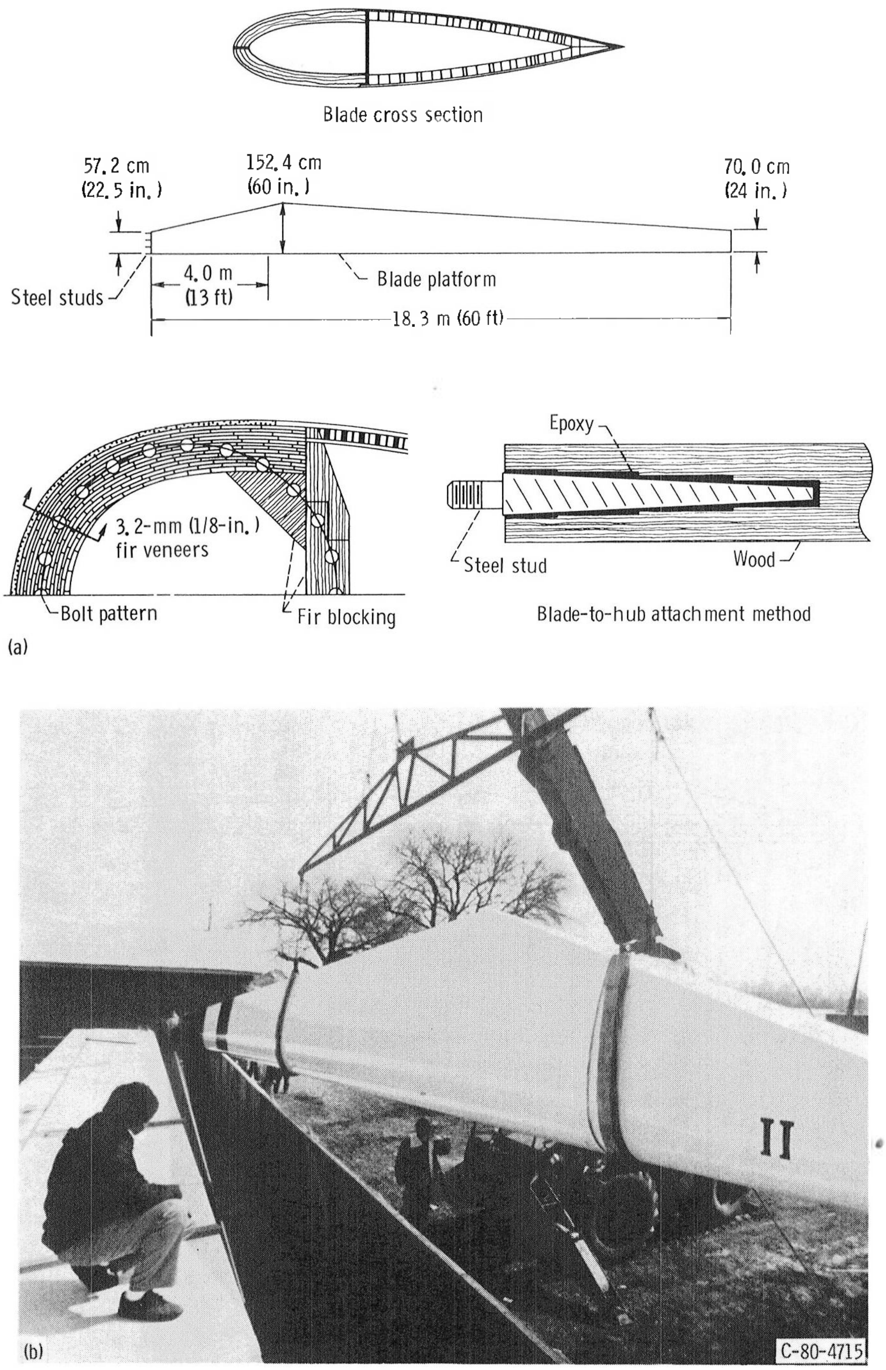

(a) Construction details.
(b) Showing steel stud bolts at root end.
Figure 53. – Wood composite blade for Mod-0A.

100 kW at 8 m/s (18 mph) could generate almost 5000 kW at a wind speed of 26.8 m/s (60 mph) if an increase in rotor speed with the high wind speed could be allowed. This is not as large a loss in long-term available wind energy as it may seem, since on an annual basis high winds are relatively infrequent and do not extend over long periods of time.

Alternative methods of rotor control are (1) variable blade pitch only on the outer portion of the blade or (2) the use of retractable spoilers or hinged surfaces (ailerons) on the outer portion of the aft section of a blade. Most of the torque from a turbine rotor is produced on the outer portion of the blades, and therefore rotor control devices can be very effective when located

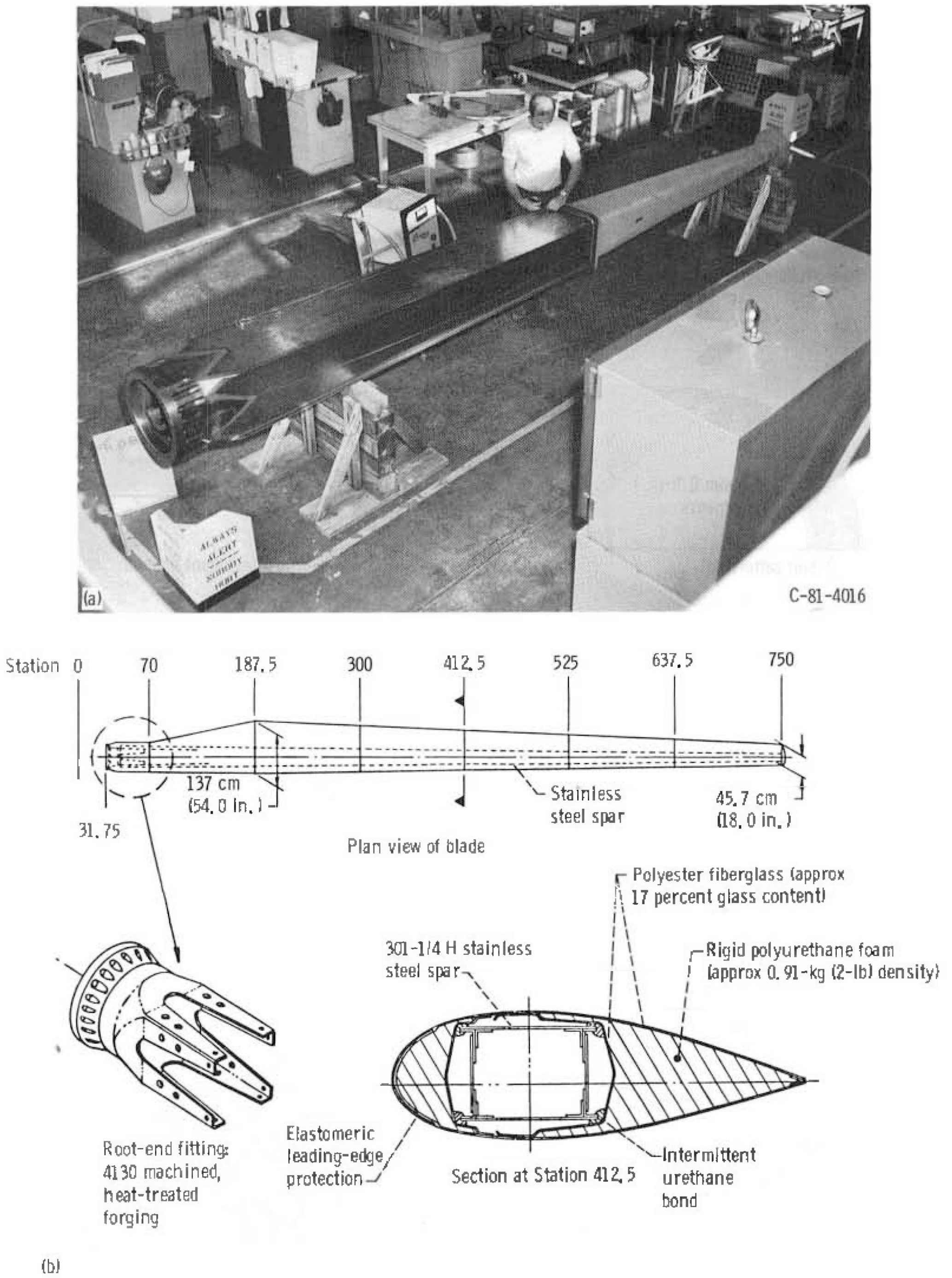

(a) Stainless steel root-end spar—test specimen.
(b) Schematic of blade showing stainless steel spar and root-end fitting.
Figure 54. – Proposed steel spar blade design for Mod-0A developed by Budd Co.

near the outer diameter. This method of rotor control, called partial-span pitch control, is used on the Mod-2 machine, where the outer 30 percent of the blade can turn. Partial-span control systems allow continuous construction through the hub and fixed pitch for the inner portion of the blades. When compared with full-span blade pitch control, substantial weight and cost savings are realized by moving the pitch control away from the hub and pitching only the outboard portion of the blade.

Overspeed can be controlled by using movable spoilers on the outer portion of the rotor blade. Spoilers located near the tips of rotor blades, when extended from the rotor blade surface, will also reduce lift and increase drag. As a result the spoilers aerodynamically reduce rotor torque. A disadvantage in using spoilers is that they are not effective in starting a rotor. Spoilers get their name from their use on airplane wings where, when extended from the wing surface, they spoil the airflow and thus reduce lift or torque and increase drag, slowing the airplane.

A possible alternative to the use of spoilers is a hinged trailing-edge surface, or aileron, on the outer portion of each blade. Ailerons can act like spoilers to prevent overspeed but have the advantage of providing starting torque and increased power at low wind speeds. If moved in one direction (upward), they produce drag and provide speed control; if moved in the opposite direction (downward), they produce lift or a power output gain. Full-scale tests of a rotor with aileron control surfaces are currently being conducted on the Mod-0 wind turbine research machine to support the development of the advanced-technology wind turbine.

System Controls

Controls are required on a wind turbine mainly for startup of the rotor, synchronization of the generator with the utility network, power regulation, and shutdown of the rotor. Controls are also needed to turn (or yaw) the rotor into the wind and for protection of the wind turbine in case of abnormal operating conditions and in emergency situations. Since the controls must be able to operate at a remote, unattended site, automation is necessary. NASA machines have been operating very successfully in an unattended mode under the control of a microprocessor. The microprocessor must be self-monitoring for fault detection, operate under extreme environmental conditions, and have independent battery electrical operating power.

Sensors, actuators, and the microprocessor make up the main control system. Sensors are used to measure many variables including wind speed and direction, rotor speed, pitch angle of the rotor blades, torque of the rotor, electrical power, and many other parameters necessary to assure the safe operation of a wind turbine. Redundant sensors are used in many cases to improve safe and reliable operation. Hydraulic actuators are commonly used to change the blade pitch. Electric motor gear drives were used to change the yaw angle of the rotor on the Mod-0A machine.

The microprocessor typically controls the machine as follows: A very low wind speed picks up to the startup wind speed, and the wind sensor monitors this for several minutes. If this startup wind speed holds, the microprocessor commands the yaw drive to position the rotor into the wind. At the same time the blade pitch change mechanism is commanded to change the blade angle from the feathered position to a power-producing pitch angle. This starts the rotor turning. Blade angle is further changed as the rotor accelerates to rated speed. At rated rotor speed under speed control the wind turbine generator is synchronized to the utility network and the microprocessor changes to a power control mode. The wind turbine is held at its rated power by adjusting the blade pitch to variations in wind speed. If the wind is less than rated speed, the blade pitch angle is held to produce maximum power output for the lower wind speeds. If the wind exceeds the cutout velocity, the microprocessor commands an increase in blade pitch to prevent excessive overspeed. If the wind falls below the cut-in velocity, the microprocessor will command an increase in blade pitch to the feathered position and the rotor will stop. In addition, the microprocessor must recognize any abnormalities in the system and take appropriate action to protect the system. Recording of engineering data during operation is also controlled by the microprocessor.

The flexibility of the microprocessor in developing the operational strategy for controlling the Mod-0 wind turbine was perhaps the most significant advantage of using a microprocessor. In the early experimental phase of the Mod-0 project the wind turbine was operated in many different modes: manual control, without a microprocessor; as a speed-controlled machine feeding a load bank; and finally as a synchronous machine connected to both large and small power networks. By simply modifying the software it was possible to accommodate all of these operating modes. All of the information that the microprocessor might need in order to control a wind turbine was wired to the microprocessor. Every output that an operator might have to manipulate was also connected to the microprocessor. The wind turbine was controlled in any way desired by simply reprogramming. If hard-wired analog circuitry had been used, every operating mode would have required different equipment and every control strategy change would have required circuit modifications, system rewiring, and retesting.

The following example shows how the flexibility of the microprocessor helped solve problems that developed in the field: The original concept was to start the wind turbine at a wind speed of 4.0 m/s (13 mph) and stop it at 2.4 m/s (8 mph). It was found by experience that at times the wind speed tended to oscillate continually over this range and thus cause excessive start-stop cycles of the wind turbine. To solve the problem, various filters were applied to the wind speed signal. It was not possible to find filters with time constants long enough to prevent excessive start-stop cycles and short enough to be sufficiently responsive for control. The solution was to program the microprocessor to test if the high or low winds had persisted for 10 seconds before deciding to shut down. A relatively lightly filtered signal was used for control. Easily implemented and proved successful, this approach resulted in improved performance.

The Mod-0 wind turbine was designed with a microprocessor that controlled only a portion of the machine operating functions (ref. 32). For example, the Mod-0 used a separate yaw control system, independent of the microprocessor, to keep the nacelle pointing into the wind. The yaw controller was basically an analog voltage comparator. The comparator detected the difference between the actual nacelle direction and the actual wind direction and would then drive the nacelle yaw motors so as to make this difference zero. There was a deadband of ±25° in yaw, and the wind direction signal was filtered so that the system would not react to wind gusts. The yaw motors were capable of driving the nacelle through 360° in 6 minutes. The circuitry was designed so that the nacelle would always take the shortest path when aligning itself with the wind.

In addition, an automatic synchronizer, independent of the microprocessor, was provided to connect the wind turbine to the power line smoothly. The microprocessor decided when to energize the synchronizer. The synchronizer compared the power-line phase angle with the alternator phase angle and closed the connecting circuit breakers when the phase angles were matched and steady. As soon as the synchronization was complete, a signal was returned to the microprocessor. The microprocessor would then direct the pitch controller to switch from the speed control mode to the power control mode.

The Mod-1 machine was designed around minicomputers rather than microprocessors. Minicomputers were selected because of their extensive software development support systems. These software development systems were considered desirable for programming and testing the wind turbine in the remote location at Boone, North Carolina.

The control system for the Mod-1 wind turbine included a Digital Equipment Corporation PDP 11/34 computer that was located in the ground control enclosure at the base of the tower. The PDP 11/34 interfaced with two PDP 11/04 microcomputers. One PDP 11/04 was located in the ground control enclosure and the other in the nacelle. The control system would automatically start, operate, and stop the machine, align it with the wind, and provide remote dispatcher control through a telephone link. In addition, if the control system detected any operation or machine anomaly, it was programmed to safely shut the wind turbine down. Figure 55 presents a simplified control schematic.

During experimental testing of the Mod-1 machine, some problems occurred with the control system. For example, the most significant problem was computer-to-computer communications. This problem occurred between the Digitial Equipment Corporation PDP 11/34 and its recording unit and the two PDP 11/04's. The occasional loss of communication between computers resulted in unscheduled wind turbine shutdowns. During early experimental operation of Mod-1, communication malfunctions were experienced about 8 days per month. As causes were determined and solutions implemented, malfunctions were progressively eliminated.

It was also learned during early testing that qualified and readily available personnel were needed to perform computer system preventive and corrective maintenance. For example, Mod-1 site operation records indicate that from March through December of 1980, expert computer technicians were required 13 times. In addition to preventive maintenance every 3 months, computer services were needed for repair of the line printer, replacement of electronic boards, replacement of the disk drive, repair of the tape unit, and repair of the remote terminal.

Operation with a minicomputer-based control system, on the other hand, proved to be highly flexible in making system changes quickly and inexpensively. As an example, after it was concluded that the system rotor speed had to be slowed to reduce the Mod-1 sound generation to acceptable levels, the central processor logic within the control-and-recording unit was easily modified to operate the wind turbine at 23 rpm with a 1200-rpm generator.

As a result of the experience gained from the first-generation (Mod-0, Mod-0A, and Mod-1) machines, the second-generation (Mod-2) machine is using the simpler, more reliable, and more durable microprocessor. The third-generation (Mod-5) advanced-technology machines will also use the microprocessor in their control systems.

Tower

Large-diameter rotors call for rather high and somewhat specialized support structures or towers. Height is desired to take advantage of the higher wind speeds at the higher elevations and to reduce the effect of wind variations that extend up from the ground (called wind shear). Tall towers must support the heavy rotor and generating subsystems as well as absorb vibratory loads created by the wind and the rotating blades (ref. 33). The towers must be resistant to hurricane force winds, gusts, and seismic shocks. Good designs avoid major dynamic interactions between the rotor and the tower. Structural stiffness of the tower should be such that its natural frequency clearly avoids the primary loading frequencies caused by the rotor while operating at rated speed.

The Mod-2 tubular tower was designed so that during operation it fundamentally oscillates in bending at 1.3 cycles for each revolution of the rotor, or 1.3 P. It was also designed so that it twists angularly back and forth about a vertical line through the center of the tower at about 4.0 cycles for each revolution of the rotor. In other words the natural frequency of the Mod-2 tower in torsion is 4.0 per rotor revolution or, 4P. In contrast, the

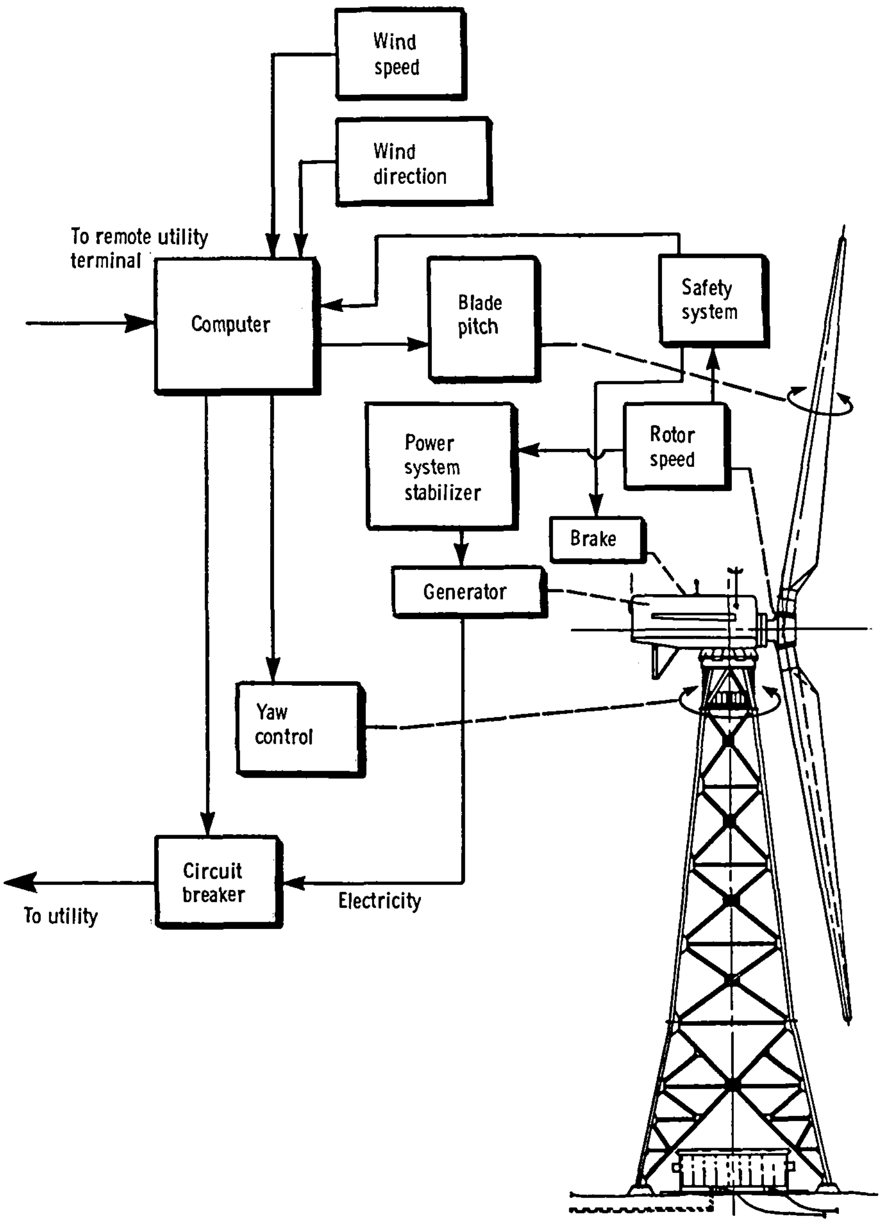

Figure 55. – Simplified schematic of Mod-1 control system.

Mod-1 tower was designed to have a fundamental bending frequency of 2.8 P and a fundamental torsion frequency of 6.5 P. Since the frequencies of the Mod-1 tower are higher, the Mod-1 tower is stiffer than the Mod-2 tower for bending and torsion. The fundamental cyclic forcing loads resisted by the tower are mainly caused by rotor-wind interaction. The loads resisted by the tower predominantly occur two times for each rotor revolution, or the loads occur at a 2P frequency. The frequency of the Mod-1 tower, at 2.8 P, was purposely selected to be above the 2P forcing frequency to avoid resonance. The frequency of the Mod-2 tower was selected as 1.3 P, below the 2P forcing frequency again to avoid resonance, during operation at the rated rotor speed.

The Mod-2 tower is often referred to as a "soft" tower because its bending frequency is below the frequency of loading. The Mod-1 tower is classified as a "stiff" tower because its bending frequency is higher than the load frequency. The first-generation machines (Mod-0A and Mod-1) used the stiff steel truss tower. The second- and third-generation machines use the "soft" tubular shell tower. The soft tubular tower is lighter and more economical to construct than the stiff truss tower. The tubular tower is more pleasing in appearance. The tubular tower also provides an all-weather interior access way from the ground to the rotating equipment in the nacelle.

Drivetrain

Torque is transmitted from the rotor to the generator through several mechanical components that make up the drivetrain. A speed increaser is necessary to convert the relatively low shaft speed of the rotor (<50 rpm) to the high speed (usually 1800 rpm) required by the generator. Rotor speed is stepped up by a gearbox placed between the rotor and the generator. Other drivetrain components include shafting, flexible couplings, bearings, clutches, and a parking brake. Components in the system should be assembled in a manner such that separate units can be repaired or changed without disturbing the remainder of the system.

Of concern to designers are the torque fluctuations imposed on the drivetrain by power changes caused by variable winds and by the tower shadow (refs. 34 and 35). For Mod-2 an alloy steel quill shaft between the rotor hub and the gearbox was designed with a torsional stiffness to damp these fluctuations. Fluid couplings were successfully used to reduce oscillations in the Mod-0A drivetrain.

Several different types of gearboxes have been used in the various wind turbines. Mod-0A used helical gears and was rated at 450 hp at 1800 rpm. Mod-1 uses a three-stage gearbox as the speed increaser. Mod-2 uses epicyclic planetary gears that provide a smaller, lighter, less expensive, and more efficient speed increaser than the parallel-shaft gearboxes used on the earlier machines. In the next-generation machine (Mod-5) additional improvement in the drivetrain components will be made possible by using a variable-speed generator. This design presently appears to have the highest potential to reduce torque oscillations. A variable-speed generator thus may permit omission of the soft quill shaft, a reduction in the size of drivetrain components, and the elimination of fluid couplings in the drivetrain.

Yaw System

Constantly shifting winds make it necessary to have a system to keep the rotor always facing into the wind during operation. A wind vane on the nacelle detects the difference between the wind direction and the yaw orientation of the rotor, or the yaw angle. If the yaw angle is not within allowable limits, the rotor is turned to the proper alignment with the wind. Yaw drives are slow (1/3 to 1/6 rpm) to avoid high gyroscopic loading on the revolving two-blade rotor. Brakes are used on the Mod-0A and Mod-1 yaw drive to restrain, or damp, yaw motions while the nacelle is being turned and to rigidly hold the structure when in position. The heavy structure is turned by hydraulic or electric drive motors.

Many small wind turbines use an aerodynamic surface, like an airplane tail, that aligns the rotor into the wind. Early Mod-0 experiments have shown that a large two-blade rotor will align itself on the downwind side of the tower, or about the yaw axis. Further efforts to learn if a large machine can operate with no active yaw control are being made and are discussed later. If the active yaw system that is used on machines like the Mod-0A could be eliminated, a substantial cost saving and increase in reliability could be realized.

Generator

A wind turbine generator driven by the rotor must have constant-frequency ac power output to synchronize with the electric utility grid. Most common ac synchronous generators provide constant-frequency power if driven at constant rotational speed. But wind turbine rotors that are controlled to operate at constant speed are not always operating at maximum efficiency over the operating range of wind speeds. Therefore one would like to allow the rotor to vary in speed so that the rotor can operate at maximum efficiency over the wind speed range. A variable-speed drive to a synchronous generator would require additional electrical devices or a different generator concept to maintain constant frequency and to synchronize the wind turbine power output with the electric utility grid. Early studies showed that available electrical devices to synchronize the generator would impose efficiency, weight, and cost penalties as compared with using a constant-speed generator. It was found that the slightly higher efficiency of the rotor operating at variable speed would not make up for the poor efficiency and high cost of equipment to provide variable-speed operation of the generator. Thus the DOE-NASA large wind turbines connected to utility grids now use a constant-speed rotor to drive the generator.

As part of the NASA research and technology development effort to improve wind turbines, investigations are under way to develop variable-speed generator technology. Techniques can be applied to a special type of generator that will hold a constant-frequency power output and maintain synchronization while speed inputs are varying.

Research and Technology Development

The current effort at NASA to support the Federal Wind Energy Program focuses on research and technology development. Less emphasis is being placed on system development, experimental field operation, and market and economic studies. Experimental machines such as the Mod-0 and the large Mod-2's will be used to conduct high-risk wind turbine research in areas having potential benefits to U.S. wind turbine manufacturers. Both experimental and analytical research is directed toward the goal of making wind energy a cost-competitive and technically viable energy alternative.

Objectives of the research and development program will be to gather and report new data on various aspects of wind turbine behavior and to be able to more accurately predict wind turbine operation and performance. Many areas of research including aerodynamics, structural dynamics, composite materials, and multiple-machine effects are currently being studied.

The aerodynamics of the rotor will be further studied, including the rotor blade control surfaces and aerodynamic forces on the rotor. Experimental studies will be conducted on wind turbine structural dynamics, or vibrations. Also the reaction of structurally flexible components, such as the rotor blades, to unsteady aerodynamic loads will be investigated. Additional research will be carried out on composite and hybrid composite materials to determine their physical qualities and durability. Also under investigation are the multiple-machine interactions brought about by wind turbines operating together or in clusters, including the behavior of these multiple units when interconnected to a utility grid.

Mod-0 Research Facility

The Mod-0 has undergone a series of extensive modifications since it first began experimental operation in September 1975. For example, the current configuration has a cylindrical tower, rather than the truss tower. The rotor configuration has changed to allow evaluation of new concepts. The Mod-0 first used rotor blades rigidly attached to the hub, with full-blade-span pitch control. Now Mod-0 is being used to evaluate the performance of a teetered rotor with aileron control surfaces (fig. 56).

The Mod-0 facility is a key tool that has been successfully used time after time to demonstrate the performance of advanced wind turbine configurations. Results of experimental Mod-0 research are used to guide the efficient allocation of resources. For example, before the decision is made to use an aileron-controlled rotor on the Mod-5, the performance of such a control concept will be evaluated on the Mod-0.

A major feature of the Mod-0 research wind turbine is its highly sophisticated and flexible wind turbine control and research data systems. The building housing this equipment is located approximately 152.5 m (500 ft) west of the wind turbine.

The wind turbine is controlled at the main control console shown in figure 57. Startup, experimental operation, and shutdown can be controlled at this console either manually or in an automatic mode. For example, rotor speed or power is controlled at the main console. During experimental operation with tip-controlled rotors or with aileron-controlled rotors, each tip or aileron can be controlled separately or collectively. Radio communication is provided, at this console, with personnel near the wind turbine during experimental operation. Radio communication is also used during routine wind turbine maintenance activities or during modifications. As wind turbine experimental data are being recorded on 14-channel frequency-modulated tape, a voice channel is also available. The voice channel is used to record specific comments about the test while the test is in progress.

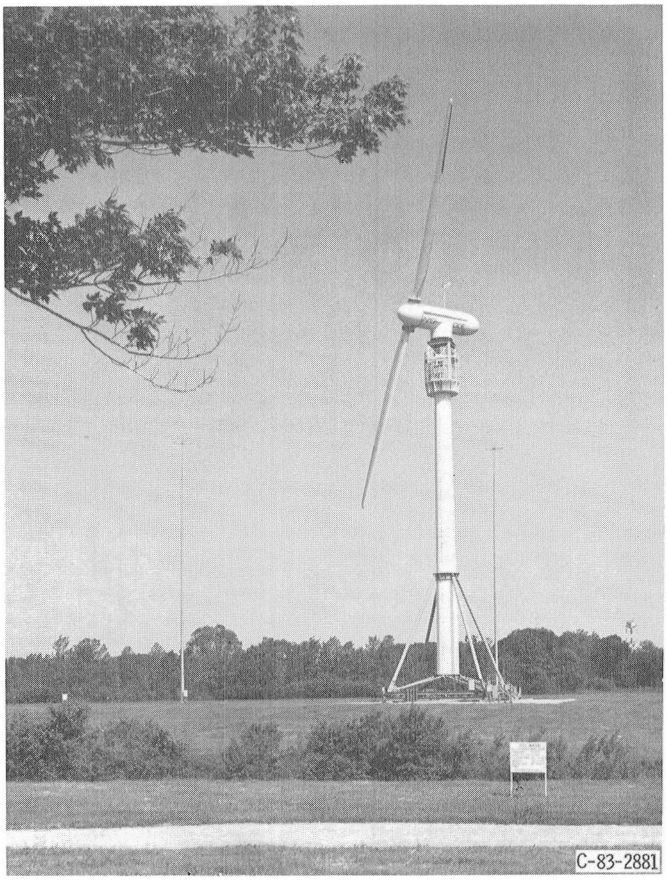

Figure 56. – Mod-0 experimental wind turbine with aileron-controlled rotor.

As shown in figure 58, a land-line voice communication link between the Mod-0 and the control room is available. Digital displays can be viewed from the main control console that provide real-time values for wind speed, ambient temperature, Mod-0 rotor speed, and generator performance parameters including kilowatt output, kilovars, and alternating-current frequency. The analog computer shown in figure 58 is used to program special Mod-0 experiments. For example, a particular Mod-0 experiment may require the rotor to increase in speed from 10 rpm to 20 rpm during a 1-minute period of time and then continue to operate at 20 rpm after that time period. The analog computer can be programmed and then used to control the Mod-0 rotor speed to meet

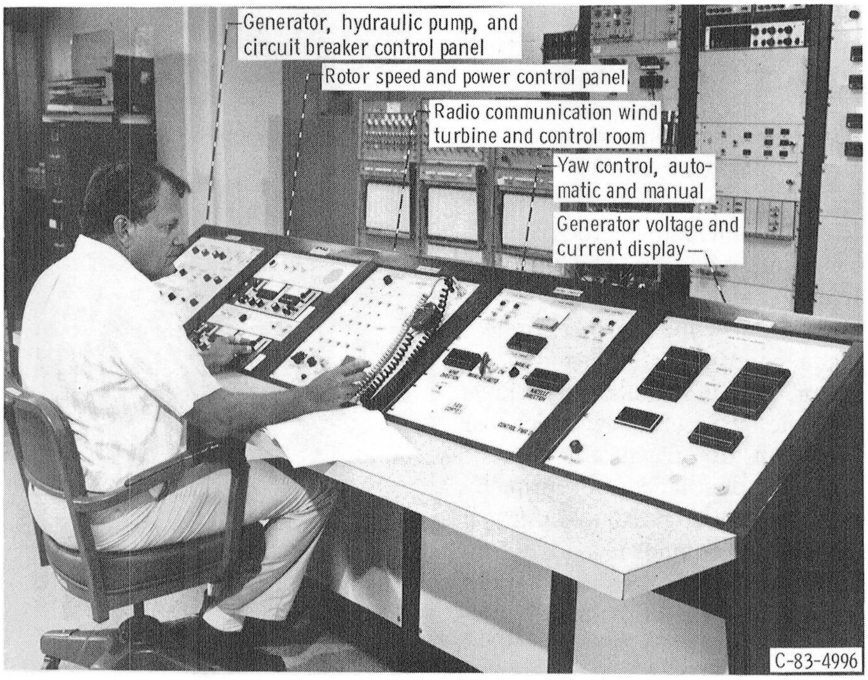

Figure 57. – Main control console for Mod-0 wind turbine.

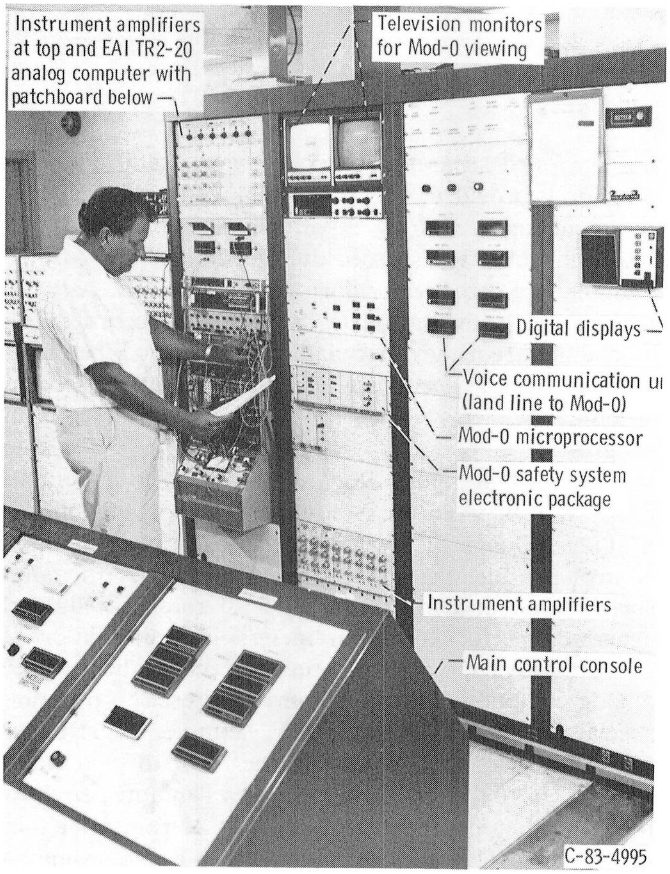

Figure 58. – Control equipment for Mod-0 wind turbine.

this experimental requirement. The television monitors are used to provide a view of the Mod-0 to those inside the control room. Television cameras are located to provide an external view of the Mod-0 and a view inside the Mod-0 nacelle.

Figure 59 shows the three strip-chart recorders, each with eight channels of data-recording capability. These recorders can provide a real-time data display while the wind turbine is operating. The recorders are also used to display analog data processed from FM data storage tapes. A two-channel strip-chart recorder provides 24 hours of continuous data on wind speed and direction. These data are obtained from instruments mounted at the 27.4-m (90-ft) level of a nearby meteorological tower. A desktop computer is shown in figure 59. The computer is programmed to assess the accuracy of data during Mod-0 checkout before an experimental run or during Mod-0 operation. The computer can provide real-time data in both graphic and tabular form. The accuracy of data as obtained from a wind-speed-measuring instrument is one example of data that can be checked before or during a Mod-0 experimental run. Real-time data such as rotor power, as measured from the Mod-0 generator, and wind speed data, as measured from the desired instrument, are fed into the computer. The computer averages these data over a 30-second period. At the end of each 30 seconds the computer plots a point on its graphic display screen of wind speed versus power. By comparing these real-time data with data from other wind-speed-measuring instruments used at the Mod-0 test facility, the accuracy of the real-time wind speed measurement can be quickly

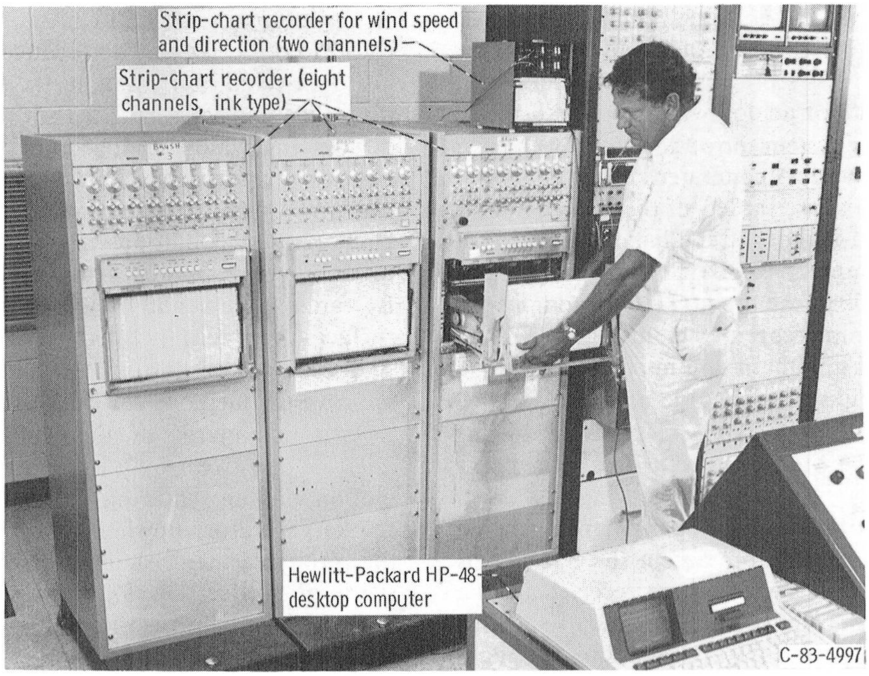

Figure 59. – Data-recording and computer equipment for Mod-0 wind turbine.

assessed. Data from strain-gage instrumentation can be checked for accuracy by using a similar technique.

The data-processing system shown in figure 60 is used to perform statistical analyses of various parameters that are measured during the experimental operation of the Mod-0 wind turbine. For example, rather than processing and storing analog wind speed data as a function of time, the data-processing system can calculate 1-minute averages of wind speed and store each average on tape. In addition, the maximum and minimum wind speeds for each 1-minute period are retained, and these values are stored on the magnetic tape. As a result, with these three bits of information (the average, maximum, and minimum wind speeds), a statistical model of the wind

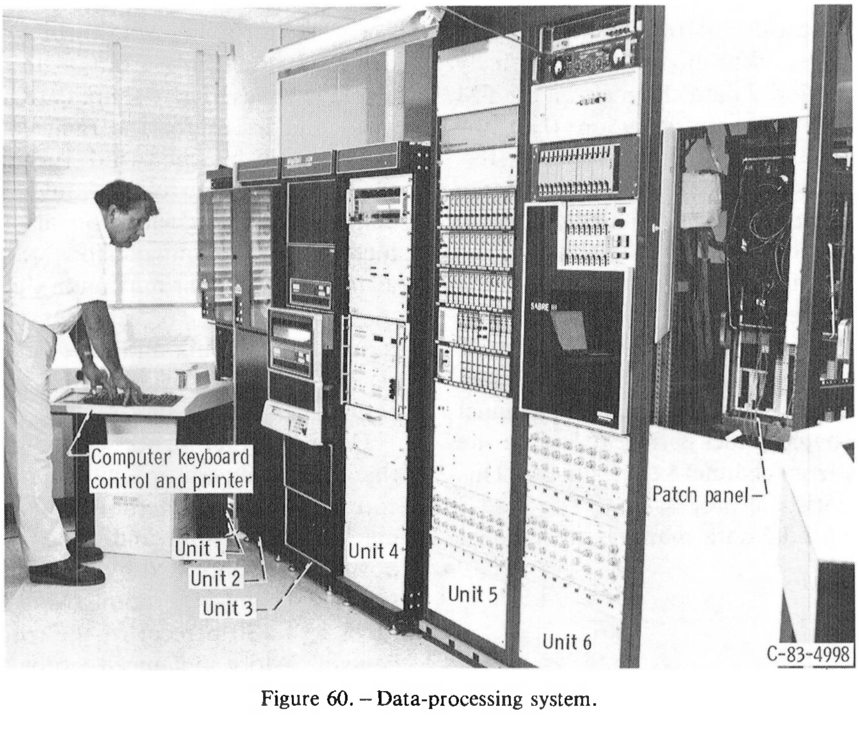

Figure 60. – Data-processing system.

speed over a 1-minute period is retained. This statistical model takes up much less storage space on the magnetic tape than the 1 minute of analog wind speed data.

The data-processing system shown in figure 60 consists of a variety of equipment. A computer keyboard control and printer are shown at the far left of the figure. Units 1 and 2 are each digital magnetic tape handlers. Unit 3 is the main frame computer, a DEC PDP-11. Unit 4 contains a digital clock at the top and a data compressor below. The data compressor is the unit that reduces analog data to digital minimum and maximum values.

Unit 5 contains banks of electronic equipment called discriminators. Engineering data are received in the control room from the Mod-0 wind turbine as a steady flow of FM signals. These electrical signals carry information from all of the measuring instruments on the wind turbine. The discriminators accept the FM signals and identify specific data that are being received from a measuring instrument. The discriminator than sends this sorted information to the PDP-11 computer for data processing. This sorted information can also be sent to strip-chart recorders or other data-processing equipment.

Unit 6 contains a Sangamo-Weston Sabre III FM tape recorder and signal conditioner. This unit is used to store FM data obtained from the Mod-0 wind turbine during experimental operation. The data-processing system is thus able to store Mod-0 data on tape with the FM recorder. If desired, at a later time these FM data can be reprocessed statistically by using the unit 3 computer and then storing this information on the tape-handling units 1 and 2.

The data-processing system is used to analyze data from all of the DOE-NASA and DOI-NAS wind turbine sites. Data from experimental tests on the Mod-2 wind turbines at Goodnoe Hills, Washington, are routinely stored on FM tape. The Mod-2 data channels on the FM tape, however, carry different information than the Mod-0 FM data tape. To sort out these differences and identify the specific data channels, the patch panel shown at the far right of figure 60 is used. A special patch panel was configured to handle Mod-2 data. For example, wind speed data from the Mod-2 site might be stored on channel 5 of the FM tape. Wind speed data from the Mod-0 site might be stored on FM tape channel 2. The data-processing system is designed for Mod-0 data and, as a result, will look for wind speed data on channel 2. The purpose of the patch panel is then to switch the Mod-2 wind speed data from channel 5 to channel 2. This allows for the proper statistical processing of the Mod-2 wind speed data. Other Mod-2 data channels are handled in a similar way.

Aerodynamics

Several approaches are being taken to improve and gain a better understanding of the aerodynamics of the rotor. Recently, research to reduce drag of airplane wings has discovered that small surfaces attached to the wing tip, called a winglet, reduce the drag of the wing. Similar devices on wind turbine rotor blades may result in improved rotor performance. Several blade tip configurations will be tried to increase wind energy capture. Under some conditions rotors have been found to produce more power than predicted from analysis. Research instrumentation will be mounted on rotor blade surfaces to determine airflow over the blade surfaces. The data gathered from this research will be used to improve the methods for calculating blade performance.

Airflow patterns of the wind passing through the circular area swept by a rotor are being documented by motion pictures showing colored smoke streams from smoke generators upwind of the rotor flowing through the rotor and then reacting downwind of the rotor. Air swirls or vortices developed by the tip of the rotor are being studied by observing the smoke stream as it passes by the tip of the rotor blade, as shown in figure 61. Additional studies are made by placing smoke generators on the blade tip and observing the airflow patterns as the tip revolves, as shown in figure 62. These smoke trails are seen to swirl and break up as the smoke moves downwind a short distance from the plane of the rotor. Also, interference of the upwind position of the tower can be seen as the smoke trail from the tip passes the narrow area directly behind the tower. Results of these studies will be used in one case to improve computer models of airflow characteristics. The analytical models, for example, do not accurately predict rotor performance at low wind speeds during below-rated wind turbine operation (ref. 36).

Up to this point, wind turbine rotor blades have been designed and built from airfoil shapes intended for airplane wings. These shapes are not necessarily the most optimum design for the range of operating conditions experienced by the wind turbine rotor. Large wind turbine rotor airfoils should be thicker than the conventional thin wings on airplanes. Well-established methods for designing airfoils will be extended to include airfoils having their maximum thickness up to 30 percent of their width. To validate these advanced designs, models will be built and tested in a wind tunnel. Later, a set of thick blades will be built and tested on a full-scale rotor.

Detailed experiments will be conducted to determine the effects on rotor characteristics of several airfoil control surface methods. On the first-generation machines (Mod-0A and Mod-1) the rotor speed and power were controlled by pitching the entire blade span. On the second-generation (Mod-2) machines, only the outer 25 to 30 percent of the rotor blade is pitched for control. More advanced rotor designs may achieve control by moving an aileron, or only the rear portion or trailing-edge surfaces of the blade, as shown in figure 63.

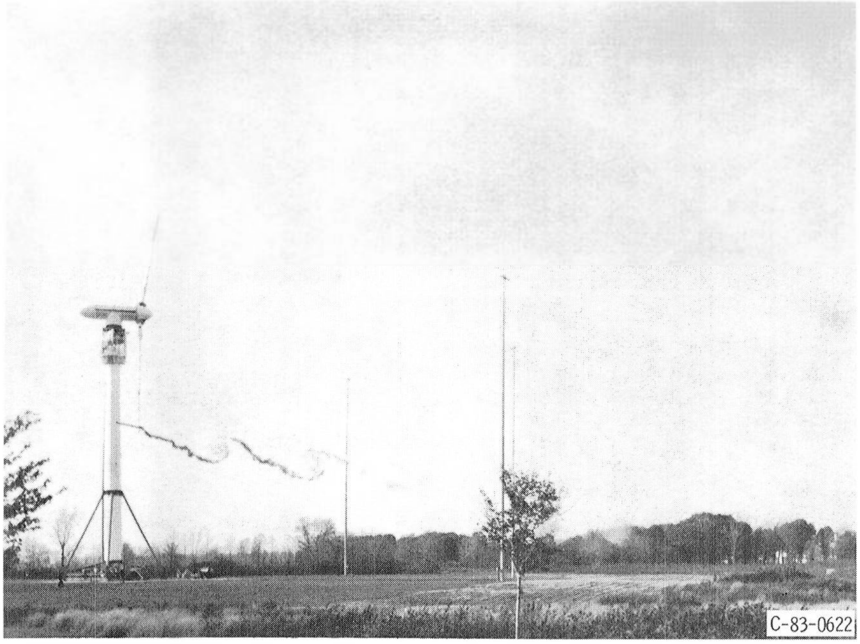

Figure 61. – Rotor blade tip vortex experiment with upstream smoke generator—Mod-0 wind turbine.

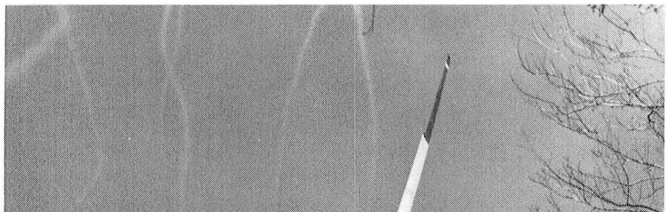

Figure 62. – Rotor blade tip vortex experiment with blade tip smoke generator—Mod-0 wind turbine.

A similar method of control is used on airplanes (ailerons, elevators, and flaps). Fixed-pitch rotors, with no control surfaces, can be used if a generator having variable-speed capability is available.

Objectives of this research on the various airfoil control surface methods will be to investigate and obtain a data base on the performance of rotors with full- and partial-span pitch control, trailing-edge control surfaces, and fixed-pitch blades. Results and conclusions from this research will be reported as the various investigations are completed. Measured performance will also be compared with theoretical performance predictions in these reports.

Additional research will be conducted on rotors subjected to both steady and unsteady aerodynamic forces. One area to be investigated will be blade loads and performance when the blades are extracting much higher wind energy than those currently operating. Present blades produce 50 to 400 watts per square meter of rotor area. Rotors designed to produce up to 700 W/m^2 will be designed, fabricated, and tested under variable and steady winds. At such high wind conversion efficiencies the aerodynamics of the rotor blade become even more important. Another area to be studied will be the effect on wind turbine performance of unsteady aerodynamically induced loads when the rotor blade stalls. A blade is in a stall condition when the desirable smooth airflow over the blade surfaces becomes turbulent and separates from the blade surface. When stall occurs, the aerodynamic lift on the blade is greatly reduced and the drag is increased. Stalls can be caused when the blade airfoil angle of attack, or pitch angle, is too high for the

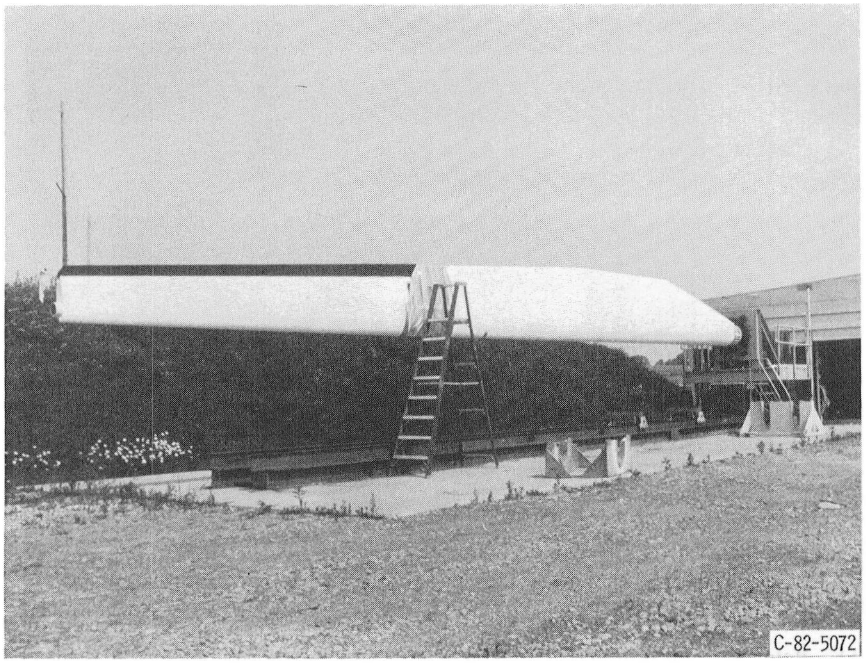

Figure 63. – Experimental 18.3-m (60-ft) long blade with aileron (trailing edge) control surface.

existing wind speed. Aerodynamic forces on the rotor blades brought about by the turbulent airflow wake downstream of the wind turbine tower will also be investigated. Rotor loads created by tubular towers will be analyzed and compared with data gathered previously from truss towers.

Wind turbines produce some noise (ref. 37). Unsteady airflow over the rotor blades and interaction of the rotor with the airflow wake of the tower are the major noise generators. The noise, or acoustic emissions, as perceived by people both inside residential homes near a wind turbine and outdoors, will be recorded, characterized, and presented to test subjects in a laboratory. From these tests a perception threshold of the noise spectrum will be determined. Also, a survey of community reaction to wind turbine noise will be conducted at operating sites. This will help to establish the degree of community annoyance to noise levels above the threshold of perception, which is the minimum awareness of the presence of the noise.

Structural Dynamics

Both experimental and analytical research will be undertaken to gain a better understanding of the structural dynamics of wind turbine systems and to improve operation by controlling and preventing, where possible, undesirable dynamic effects. Sources of rotor dynamic loads and deflections include, for example, the effect of wind shear on the rotor during rotation. Wind shear is defined as the variation of wind speed with altitude above ground level. For most wind turbine sites the wind speed increases with altitude above ground level. As a result, each rotor blade experiences higher wind speeds and resulting higher loads at the top of its travel than at the bottom, or lowest position above ground. Air turbulence caused by the tower, and occurring downwind of the tower, causes dynamic blade loads and deflections as each blade passes through the turbulent region. The wind itself can be very turbulent and is a primary source for rotor loads and deflections. Variability of the wind is felt not only by the blades as they rotate but also by the drivetrain and tower since the loads from the rotor are transmitted into these components, similar to the way electricity is conducted through a circuit.

The Mod-2 wind turbine data have shown that the loading effects of turbulent winds on certain components cannot be fully corrected by rapidly controlling the blade pitch. Because of the interaction of the drivetrain, rotor, and tower, the blade pitch control was found to create unstable power quality in very high winds. Research will be conducted to learn more about the dynamics involved and to develop control procedures to prevent these potential dynamic instabilities.

Another source of dynamic forces acting on the wind turbine system is the rapid change in wind direction. Yaw alignment of the rotor with the wind is needed as the wind direction changes. Both rapidly controlled and free yaw systems will be investigated to determine the effects on the wind turbine system. In a Mod-0 test of free yaw stability and alignment with the wind, the rotor was found to be 40° from the wind direction (ref. 38). Significant yaw misalignment with the wind can prevent optimum wind turbine performance. Existing Mod-0

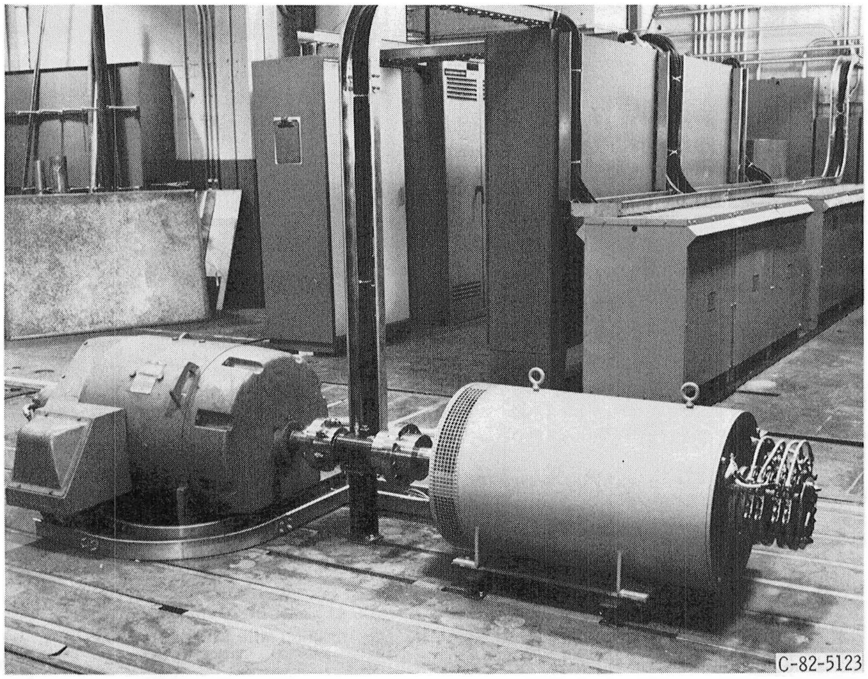

Figure 64. – Experimental variable-speed generator, electric motor drive, and electronic control cabinets in test laboratory.

instrumentation and equipment will be used to conduct further research on the effects of rapid yawing on the rotor.

Several rotor configurations will be tested including one-, two-, and three-blade rotors. Although a one-blade rotor lacks symmetry, it has several advantages. The blade can be stowed behind the tower during hurricane-intensity winds to reduce the loads on the blade. One-blade rotors operate at higher rotating speeds than multiblade rotors. This means that the speed increaser or gearbox speed ratio can be reduced. The size and weight of the gearbox can also be reduced. However, the torque from single-blade rotors is not as smooth as the torque from multiblade rotors. This undesirable feature may be minimized by using a continuously variable-speed generator. Both the one-blade and two-blade rotor configurations will be operated at or near aerodynamic stall conditions and variable wind conditions to determine the response of the electrical system and the rotor structure.

Rotor blades are structurally elastic or flexible; and when exposed to turbulent airflows, they may vibrate or flutter. Large loads and deflections can result (ref. 39). Turbulent airflow can be created by stalling the airflow over the rotor surface. This condition may cause blade flutter. The stalled-induced rotor vibration can become very severe and could, if not controlled properly, ultimately damage the rotor. Information that does not exist on the problem of wind-turbine-rotor airfoil flutter will be obtained on three-blade, fixed-pitch rotors and rotors with airfoil control surfaces under conditions of transient and high winds.

As mentioned previously, changing wind speeds are not only felt by the rotor but are also transmitted into the drivetrain. Drivetrain loads can exceed design allowables if the frequency of the transmitted load oscillations is at or near the resonant frequency of the drivetrain structure. It is predicted that the variable-speed generator will be effective in smoothing out these cyclic loads in the drivetrain. Research is currently being conducted with a variable-speed generator configuration to determine how variable-speed generators respond to drivetrain load oscillations induced by the rotor. An experimental variable-speed generator and the associated solid-state electronic equipment are shown in figures 64 and 65. The Westinghouse Electric Corporation has conducted studies to support the design of a megawatt-size variable-speed generator for the Boeing Mod-5B wind turbine (ref. 40).

Several methods are used to damp, or reduce, the cyclic variation in power transmitted through the drivetrain. For example, a fluid coupling was used on the Mod-0A, a quill shaft is used on Mod-2, and an electrical device called a notch filter was employed in the Mod-1 control system to control drivetrain torque variation. Other damping devices will be evaluated, including mechanical systems such as a spring-mounted viscous-damped speed increaser.

Computers are used to analyze many wind turbine operating characteristics including loads, stability, and performance. NASA plans to improve these computational procedures by comparing calculated results with experimental data in real time during wind turbine operation. Also, deficiencies in computer codes will be

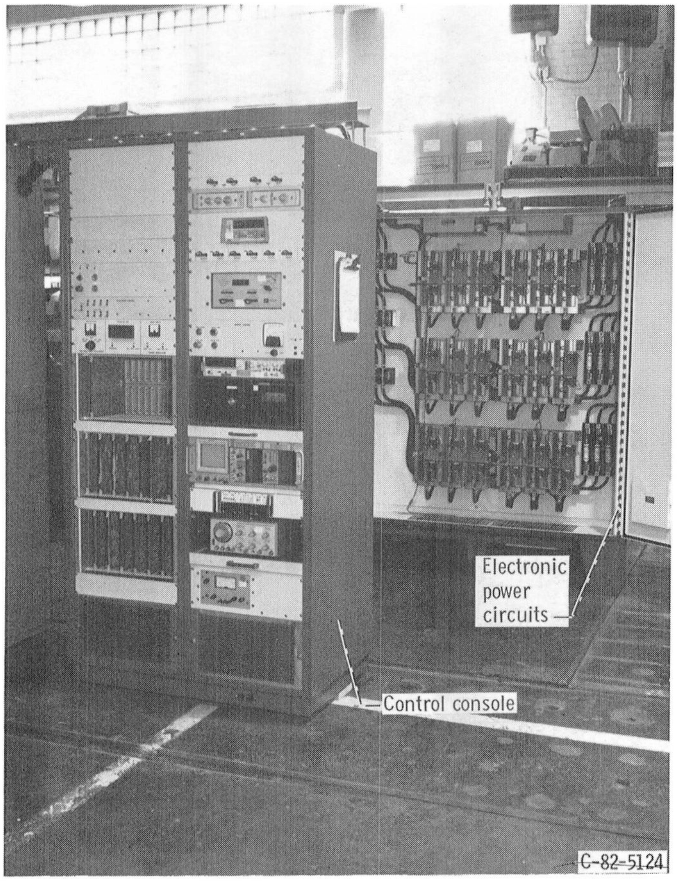

Figure 65. – Control console and electronic power circuit cabinets, for experimental variable-speed generator.

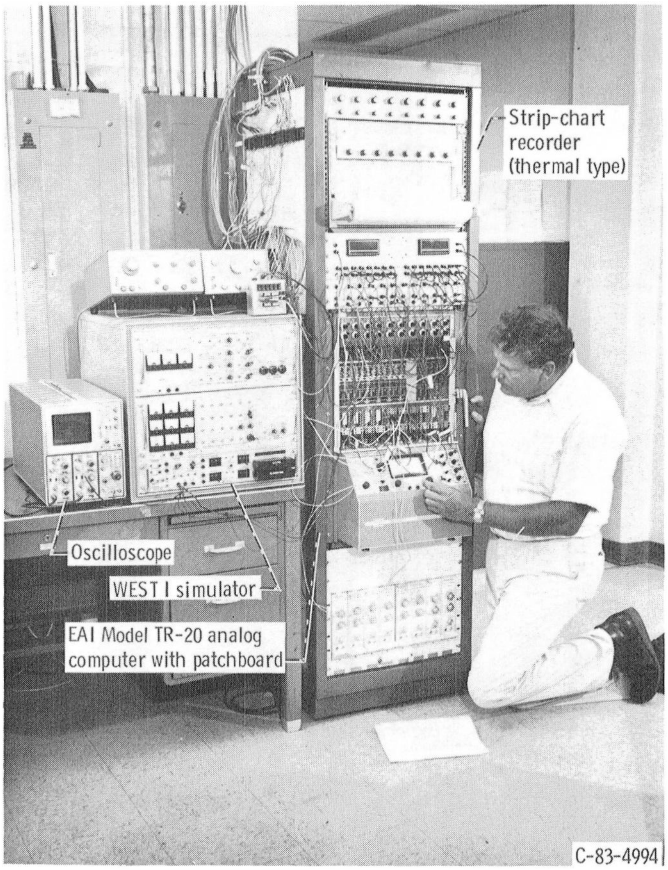

Figure 66. – WEST I simulator with supporting equipment.

identified and advanced numerical methods will be implemented. For example, present computer methods can calculate rotor loads on the earlier machines but do not consider the variability of wind speed within the circular area covered by a large rotating blade. Calculation methods will be developed to include these more involved operating conditions.

Techniques have been developed to simulate wind turbine dynamics, in particular, blade loads in unsteady winds. Figure 66 shows the WEST I simulator. Supporting equipment for the WEST I includes an oscilloscope and an EAI Model TR-20 analog computer. WEST I is designed to simulate the performance of a wind turbine rotor in real time. Wind speed in analog form is accepted by the simulator. The simulator uses this information to determine how a wind turbine rotor performs in real time. Computer simulators are being advanced to include other aspects of wind turbines such as flexible towers, variable-speed rotors and generators, free yaw behavior, and response to gusts.

Composite Materials

Low-cost and highly durable rotor blades are goals of NASA's wind turbine research. Both wood and fiberglass composite materials have been identified, through development and testing projects, as the most promising materials to meet these goals. Fatigue testing of fiberglass composite materials for wind turbine blades was recently completed (ref. 41). However, additional research is needed to improve these materials and to develop extensive and comprehensive properties data. A need for new materials data was discovered during the design effort on the laminated-wood-epoxy composite blades built for the Mod-0A machines. These blades were designed by using data on wood fatigue strength determined some 40 years ago because data on laminated-wood-epoxy composite material were not available. As a result of these limited data the blades were designed heavier than necessary. Basic materials properties tests will be conducted to determine the effects of such variables as wood grade, moisture content, construction procedures, and temperature and humidity exposure.

Prestressed concrete was studied and rejected as a blade material because of excessive weight. A new technique of reinforcing concrete by using glass or graphite fibers could possibly change the outlook of using concrete for blades. A conceptual design will be made to determine if blade weight and cost would be reasonable if fiber-reinforced concrete were used.

High-strength graphite filaments can also improve the strength of both wood and fiberglass composite blades. Because the wood blades are of laminated construction, a laminated reinforcement using high-strength materials can be readily incorporated into the fabrication procedure. Blade test articles will be built and tested to acquire strength data and to develop the ability to apply this technology to full-size rotor blades.

Experimental tests on newly fabricated blades will be carried out at NASA before their installation to determine if the blades actually meet the structural requirements. Measurements will be made to determine blade deflections under design loads and other structural characteristics of the blades.

Laminated-wood and fiberglass composite blades present a difficult structural design at the point where the blade attaches to the hub. Steel bolt-like attachment fittings or studs must be securely bonded to the root end of the blade since high strength is required at this steel-to-wood joint. A number of possible blade-to-hub attachment concepts will be fabricated. The test article will be subjected to ultrahigh cyclic loading conditions to determine the life expectancy of these attachment fittings.

For economic wind turbine operation, rotor blades should have an operating life expectancy of about 30 years under widely varying environmental conditions such as salt-laden, humid air and high and low temperatures. Research is required to determine the effect of such extreme environmental conditions on rotor blade structures and will provide the technology needed for environmental protection. Data will be acquired by environmental and time-accelerated testing methods and by actual real-time exposure to various environmental conditions. Samples of bonded, laminated-wood-veneer blade sections are being exposed to hot, sunny, low-humidity conditions on the California desert and to high-humidity salt air at the NASA Johnson Space Center in Texas.

Wind turbines are prone to lightning strikes since they are, by necessity, very tall structures that are located in open areas. Research will be conducted, using lightning detection instrumentation, to determine the frequency and magnitude of lightning strikes at various wind turbine sites. Methods for designing wind turbine lightning accommodation systems will be reported as a result of this research.

Multiple Systems Interaction

Three Mod-2 wind turbines operating as a cluster at Goodnoe Hills, Washington, will be used to study how each machine interacts with the neighboring machine and how the machines collectively operate on the utility network. The machines are presently located so that winds from the prevailing direction will cause one machine to be downwind of another. As a result, one of the machines will be operating in the turbulent wake of an upwind machine. Also, the downwind machine is exposed to a randomly varying wind power. Wind fluctuations can be broad scale and influence all machines or can be localized and affect only a particular machine. Defining the effects of these conditions on the performance and structural dynamics, or vibration, of the wind turbine system will be an objective of NASA research in cooperation with the Boeing Engineering and Construction Company, the Pacific Northwest Laboratory, the Electric Power Research Institute, and the Bonneville Power Administration.

Experiments are also planned to evaluate the response of a multimachine array to utility network operating modes. Utilities must operate at fixed voltage and frequency. They also have requirements for power quality from their power-generating sources.

Methods for predicting airflow conditions downwind of a wind turbine are being developed by Pacific Northwest Laboratory and compared with measured wake flow data from the Mod-0A wind turbine that was located at Clayton, New Mexico (ref. 42).

Wind Characteristics

The wind, a renewable energy resource, is usually characterized in terms of its available power, its variability, and national distribution. Site selection for a wind turbine depends to a large extent on these characteristics. One useful source of wind data for selecting a site is reference 14. This detailed documentation of available wind energy was assembled under the management of the Pacific Northwest Laboratory (PNL), which is operated by Battelle Memorial Institute for DOE. A report on the meteorological aspects of site selection for large wind turbines was also a part of the PNL effort. This publication (ref. 15) mainly synthesizes the work of others in identifying the most desirable wind energy sites by using available wind data along with understanding of wind behavior.

Wind Energy Density

Energy that is available from the wind varies in proportion to the cube of the wind speed. This means that if, for example, the wind increases from 10 mph to 15 mph, the available power increases not 50 percent but 237 percent. Thus for the purpose of stating the wind power resource a value called wind energy density is used rather than wind speed alone. The number describing wind energy density takes into account the cube of the wind speed and the air density. On this basis wind energy classes have been set up to display this information on geographical maps, as shown in figure 67. These classes cover a wide range of wind energy densities and are expressed as the electrical equivalent of wind energy. For example, a range of energy values from 0 to 1000 watts per square meter of area directly facing into the wind is shown in figure 67. It should be pointed out that these values are not the maximum energy that can be extracted from the wind since the power output from a wind turbine is determined by its design and operating characteristics. The theoretical maximum energy that can be extracted from the wind by an ideal wind turbine is 59 percent of the available energy in the wind. Practical wind machines remove considerably less than the maximum (30 percent to 47 percent of the available wind energy, depending on design and operating considerations).

Wind Variability

A wind turbine generally operates in wind of continuously varying speed and direction. It also usually operates in a wind speed gradient (higher at the top than near the bottom of the rotor arc) because of the so-called surface boundary layer or roughness effects. This variation in wind speed with altitude, called wind shear, can be significant and can cause undesirable loads on the rotating turbine blades. Wind speeds are usually presented at some fixed height above the ground (e.g., 10 or 50 m (33 or 164 ft)) for standardization. To calculate the speed at a different height from the one given, a rule of thumb is to assume that the speed increases as the one-seventh power of the height above the ground.

The variability of the wind, which changes with time and location, is a major problem in the siting and operation of wind turbines. Because of variability a large amount of data are needed to determine good wind turbine locations. Performance of the wind turbine is determined to a large extent by the wind variability. Because the wind energy varies as the cube of the wind speed, the energy available can be several times that calculated from the average wind speed. The added energy comes from the short-period wind gusts that are common in many areas. On the other hand, the wind gusts, directional shifts, and vertical wind shear put significant loads on the blades, the bearings, the drivetrain, and other system components. These loads can have an adverse effect on turbine component reliability and fatigue life.

National Wind Resources

The geographical distribution of wind energy densities in the United States has been made available to wind energy users in the form of an atlas for each of 12 regions in which the United States and its possessions were divided (ref. 14). Near-surface wind data used to determine the wind energy densities were obtained from 3200 reporting stations and from upper air data and qualitative indicators of wind speeds. The latter information was used to estimate wind values in areas where measured data were lacking.

Estimates of wind energy available to the user at well-exposed locations throughout the United States are plotted on regional maps and on the overall map illustrated in figure 67. The wide range of wind energy density existing in the United States is divided into seven wind energy classes as given in table IV. These classes are represented in figure 67 by varying shades of black, the darker the shade the higher the wind energy.

Site Selection

As a suitable site for a wind turbine one would obviously choose an area having high annual average wind speed. The exact location would avoid tall obstructions upwind. To take advantage of the maximum wind potential in a given area, the top of a smooth well-rounded hill, a flat plain, an open shoreline, or an island should be selected. Very high wind speeds can be produced in mountain passes where contraction (or funneling) of the wind takes place.

Besides the meteorological and terrain considerations, selecting wind turbine sites involves such considerations as land availability, the potential of television interference and objectionable noise to nearby residents, accessibility for maintenance, and availability of rights of way for transmission lines.

In summary, a wind turbine site must be selected where steady, reliable winds are available to allow the turbine to be of economic value. The wind energy density maps and data found in references 14 and 15 should be used as a first step in selecting a site. Because of local anomalies a more detailed wind survey should be taken at the actual proposed site if site data are not already available. Local

TABLE IV. - CLASSES OF WIND POWER DENSITY AT 10 AND 50 m (33 AND 164 ft)[a]

Wind power class	Altitude							
	10 m (33 ft)				50 m (164 ft)			
	Wind power density		Speed[b]		Wind power density		Speed[b]	
	W/m^2	W/ft^2	m/s	mph	W/m^2	W/ft^2	m/s	mph
1	100	9.3	4.4	9.8	200	18.6	5.6	12.5
2	150	13.9	5.1	11.5	300	27.9	6.4	14.3
3	200	18.6	5.6	12.5	400	37.2	7.0	15.7
4	250	23.2	6.0	13.4	500	46.4	7.5	16.8
5	300	27.9	6.4	14.3	600	55.7	8.0	17.9
6	400	37.2	7.0	15.7	800	74.3	8.8	19.7
7	1000	92.9	9.4	21.1	2000	185.8	11.9	26.6

[a] Vertical extrapolation of wind speed based on the 1/7 power law.

[b] Mean wind speed is based on Rayleigh speed distribution of equivalent mean wind power density. Wind speed is for standard sea-level conditions. To maintain the same power density, speed increases 3 percent/1000 m (5 percent/5000 ft).

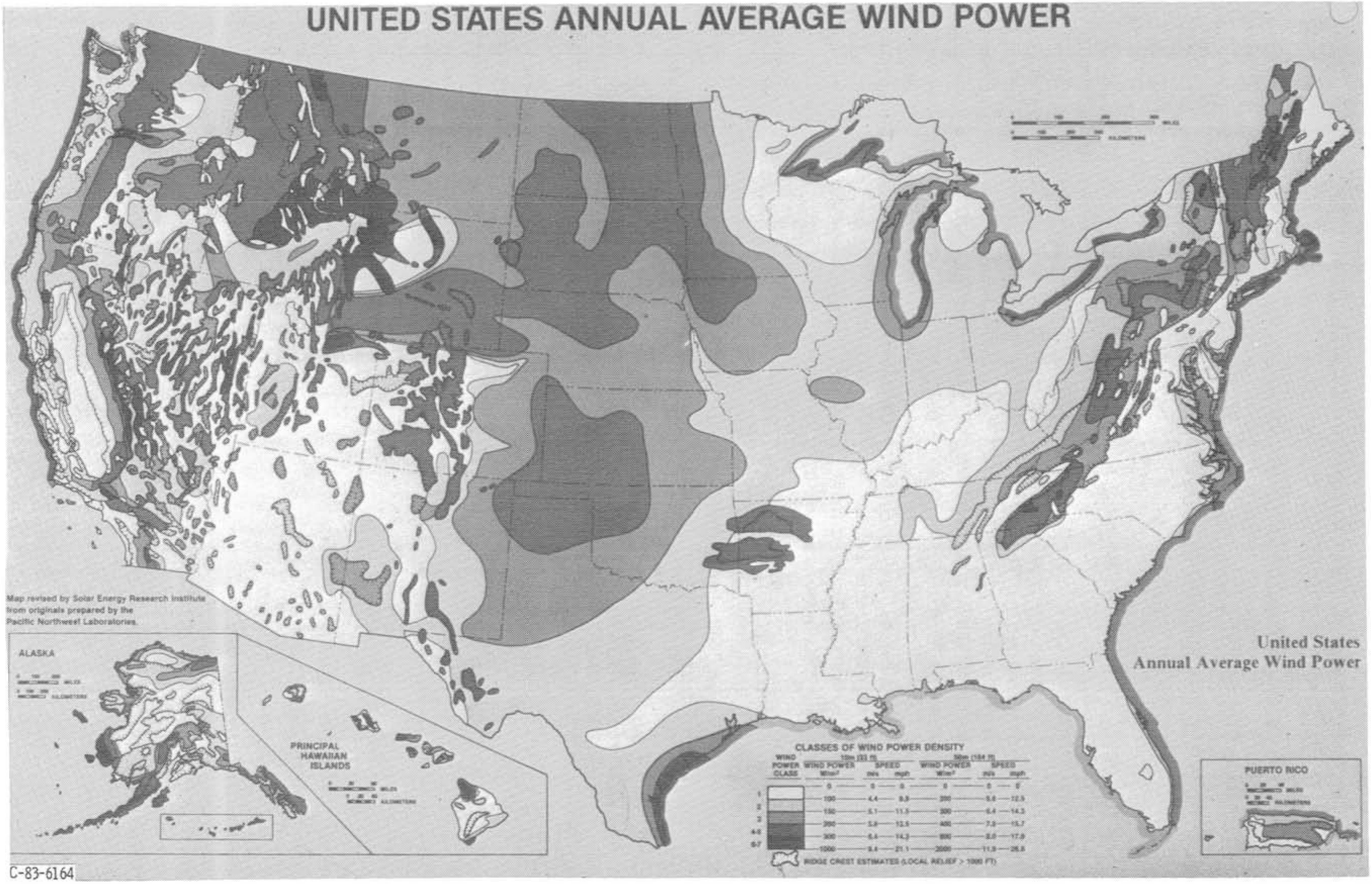

Figure 67. – Geographic distribution of wind power in the United States.

terrain can cause the wind to vary considerably over short distances, and therefore the data available from less detailed measurements may show the wind higher or lower than that at the proposed site.

Wind Turbine Economics

Although research on innovative machine designs may yield more efficient and less costly future generations of wind machines, the price of the second- and third-generation machines when produced in quantity is attractive for utility application.

The first-generation machines (Mod-0A and Mod-1) were designed primarily for research investigations and not necessarily for high-volume production. The second-generation wind turbines (Mod-2) and the third generation (Mod-5), when eventually produced in quantity, should cost considerably less. Economies are expected from automation, from discounts on quantity purchases of components and materials, and from the distribution of engineering costs over a large number of units. The production wind turbines will not incur the extensive test and checkout costs associated with experimental units.

The operating and maintenance costs for a large wind turbine depend on how reliable it is and how easily it can be maintained for operation. Costs will also depend on whether a single machine or a wind turbine cluster is to be operated and maintained. In the latter case the fixed development and maintenance expenses can be allocated to a number of wind turbines, reducing the cost per machine.

Estimates of the 100th production unit costs for the Mod-2 are summarized in table V. These costs assume

(1) Mid-1980 dollars
(2) A 25-unit wind cluster
(3) A rate of installation of one machine per month
(4) Generally flat sites with few natural obstacles
(5) Soil easily prepared for foundation
(6) Loan cost not included
(7) Transportation distance of 1609 km (1000 miles) from factory to site

TABLE V. - COST SUMMARY FOR

100th PRODUCTION UNIT

Turnkey account	Cost, mid-1980 dollars
Site preparation	203 000
Transportation	36 000
Erection	171 000
Rotor	411 000
Drivetrain	474 000
Nacelle	230 000
Tower	339 000
Initial spares	44 000
Nonrecurring	44 000
Total initial cost	1 952 000
Fee (10 percent)	195 000
Total turnkey cost	2 147 000
Annual operations and maintenance	19 000

Based on the gross national product and implicit price deflation, the mid-1980 dollar costs in table V were established by applying a 25 percent increase to the mid-1977 dollar reports in Boeing's system design and concept report (ref. 10). In mid-1977 dollars the estimated total turnkey cost of the 100th production unit for the Mod-2 would be $1 720 000 and the annual operating and maintenance cost would be $19 000.

The cost of energy (COE) of a wind turbine generator system contains three elements—capital cost, operating and maintenance costs (O&M), and energy capture. The COE is taken to be at the output of the installation's step-up transformer. The cost of energy is a function of the turnkey cost analysis, annual energy production, and the O&M cost.

$$\mathrm{COE} = \frac{\mathrm{IC} \times \mathrm{FCR} \times \mathrm{AOM}}{\mathrm{AEP}} = 4.1\ ¢/\mathrm{kWh}$$

where

FCR = 18 percent per year = levelized, fixed charge rate including return on capital, income tax, property tax, and insurance. FCR is sensitive to cost of capital, capitalization method, income tax rate, and system lifetime.
IC = $2 150 000 = initial (turnkey) cost of the energy system including complete cost exposure to the utility for purchasing, installing, and setting up logistics for energy production system.
AOM = $19 000 = annual O&M cost including operating budgets and maintenance budgets.
AEP = 9.75×10^6 = anticipated annual energy production of energy system in kilowatt-hours. AEP takes into account energy production losses attributed to unavailability of energy system equipment and unavailability of energy source (i.e., wind).

The COE for the second prototype units of Mod-0A and Mod-2 is plotted against the mean wind speed at the site (ref. 43) in figure 68.

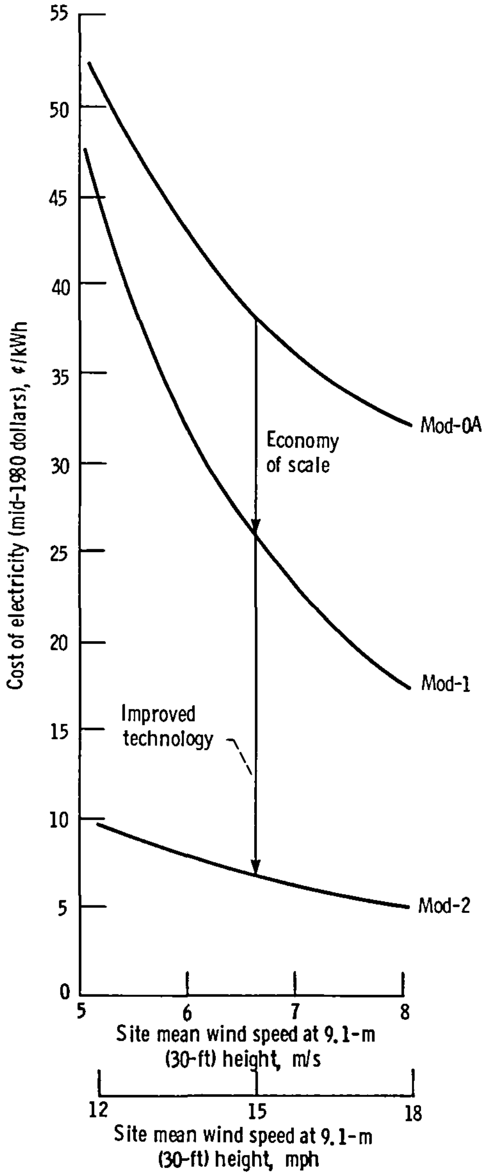

Figure 68. – Second-unit cost of electricity as function of site mean wind speed, based on 90 percent availability.

Because experimental units are aimed at providing in-service testing and hardware qualifications, the O&M costs are higher than those expected for production units. On the basis of the estimates made for production units, the annual, levelized O&M costs for the experimental machines were assumed to equal 2 percent of the total capital investment. A total fixed charge rate of 20 percent (18 percent on capital plus 2 percent for O&M) was therefore applied to the total capital investment to compute the COE's in figure 68.

As noted in figure 68, the reduction in COE from Mod-0A to Mod-1 was mainly due to economy of scale, whereas reduction in COE from Mod-1 to Mod-2 was mainly the result of improved technology.

In quantity production the COE is expected to decrease. Large wind turbines can be compared with mature products having similar functional requirements and design complexities. These comparisons suggest that wind turbines can achieve a price of $6.60 to $8.80 per kg ($3 to $4 per lb). At this price level they should be economical for a substantial number of user utilities.

For a site mean wind speed of 6.3 m/s (14 mph), for which the Mod-2 is optimized, the COE of the Mod-2 100th production unit ranges from 6¢/kWh, considering only the installed equipment cost, to about 8¢/kWh, including nominal costs for land, contingency and intracluster costs, and allowance for funds during construction. The total cost including these additional items would be more representative of the total cost to a utility.

The power produced by a wind turbine on a utility system will enable the utility to reduce or shut down conventional fossil-fuel-burning powerplants that would otherwise be required. The fuel thus saved can be credited to the wind turbine. In this mode, wind turbine power would be used whenever it is generated.

As noted before, the ability of wind turbines to save fuel will, in part, depend on how readily a utility's conventional powerplants can respond to changes in the wind power being produced. For modest amounts of wind power the wind power variations are expected to be of the same order as normal load variations and will appear to be a negative load to the rest of the system.

Ultimately, fuel savings attributable to wind turbines must be determined on an individual utility basis. To assess whether a wind turbine would be an attractive investment as a fuel saver, total fuel savings must be compared with the life-cycle cost of the wind turbine. This approach determines the so-called breakeven cost, at which point any investor would be indifferent to whether the investment is made or not. In any investment decision the perceived risks and uncertainties will play a major role. Thus conservative assessments of the breakeven costs of wind turbines will minimize the perceived risks and uncertainties.

One method commonly used in breakeven analyses is to compare the present value of all savings with the present value of all costs or, alternatively, to compare the annual levelized savings and costs. The latter is convenient and easily understood since the annual levelized cost of a wind turbine divided by its annual energy output is the cost of electricity (COE). Thus a wind turbine that has a COE of 4 ¢/kWh would break even if its annual levelized savings also equalled 4¢/kWh.

Fuel costs will tend to increase with time because of inflation. They may also increase faster than inflation, escalating in real terms. The annual fuel savings attributed to the wind turbine at the beginning of its life is multiplied by a levelization factor to find the annual levelized fuel savings over the life of the wind turbine. Assuming a 6-percent general inflation rate and that fuel prices do not escalate in real terms, the appropriate levelization factor is 2.0. However, the assumption that fuel prices will increase only at the general inflation rate is most probably conservative over the long term.

On the basis of fuel prices paid by utilities in 1980 and assuming that fuel prices will increase at the rate of general inflation, a COE range of 4¢ to 4.5¢ per kWh will make wind turbines attractive to a significant number of utilities. Achieving COE's in this range is contingent on sufficiently good wind sites. The mass-produced second-generation Mod-2 would be competitive at sites having mean wind speeds of 6.7 m/s (15 mph) or greater. Anticipated weight and cost reductions in advanced machines are expected to bring the COE within the target range at more sites and thus to significantly increase the potential market.

In addition to fuel savings, "capacity credit" may increase the breakeven value of energy produced by wind turbines beyond that of a "fuel saver." Capacity credit is defined as the amount of conventional capacity that may be displaced by wind turbines divided by the capacity added by wind turbines to the system while maintaining the same system reliability. Determination of capacity credit is dependent on the variability of the wind at a specific site, the makeup of the utility's generation mix, and the nature of its load profile. Consequently, capacity credit can only be adequately determined by examining individual utilities in some detail. On the basis of a number of recent studies, the contribution of capacity credit to a wind turbine's value will be modest.

Environmental Impacts

Although wind turbines have an environmental advantage over other power-generating sources in that they produce no air or water pollution, other environmental factors must be considered. Annoyance by low-frequency sound and local television interference were two factors discovered when the first megawatt-size machine in the Federal Wind Energy Program (Mod-1) began operating at Boone, North Carolina. It should be noted that the mountainous terrain in this area had a significant influence on how these very limited conditions affected some of the local residents. Studies that were prompted by these environmental concerns contributed to an understanding and identification of solutions. At the Boone installation, studies showed both sound and television interference to be localized and sporadic (ref. 9).

Noise

Complaints about objectionable sound from the Mod-1 machine were restricted to within 3.2 km (2 miles) of the turbine and to only 10 residents. Extensive measurements were made in the immediate vicinity of the wind turbine under various weather conditions. A particularly objectionable sound was a "thump" as each blade passed behind the tower. To eliminate the residents' objections, the rotor speed was reduced from 35 rpm to 23 rpm. This reduced the sound level by 10 db near the wind turbine site (ref. 9).

Television Interference

As might be expected, the large rotating wind turbine blades can cause some television interference by reflecting the signals in the immediate area surrounding the site. Because of terrain features and limited television reception in the general area of the Mod-1 machine, some interference was a local problem. Investigations into the problem showed the interference to be limited to a 2.4-km (1½-mile) radius of the site (ref. 9).

Interference of a television signal depends to some extent on the strength of the scattered signals relative to the primary ones. Because the signal strength at the high-point site of the wind turbine was strong, the reflected signals throughout the interference region had a high potential for causing television interference. This was particularly true in local areas where the direct or primary signals were rather weak and thus gave poor reception.

Possible solutions to the interference problem are the use of cable television in the affected area or rebroadcast of the television signals by using translators. Analyses and measured data in the interference area determined that special, high-performance antennas will not solve the television problem.

Concluding Remarks

Large wind turbines for utility applications provide a promising renewable energy option. Advanced designs produced in the Federal Wind Energy Program continue to appear financially and technically attractive. If wind technology development is allowed to continue, wind turbines will provide a means of fuel saving that a utility can employ at relatively low capital cost as compared with conventional fossil- or nuclear-fueled powerplants. For geographic regions having attractive annual wind velocities, wind-generated power can significantly reduce the consumption of fossil fuels.

The Department of Energy has supported a wide range of wind turbine research and development. Vertical-axis wind turbine research and technology development is carried out by the Sandia National Laboratory, Albuquerque, New Mexico, for DOE. Small, horizontal-axis wind turbine testing and development are being conducted for DOE by Rockwell International Corporation, Rocky Flats, Colorado. Advanced and innovative wind energy machines are being investigated for DOE by the Solar Energy Research Institute (SERI), Golden, Colorado. SERI is also conducting wind turbine acoustic research in cooperation with the NASA Langley Research Center for DOE. Research on various wind characteristics and their relation to wind turbines is also part of the DOE-sponsored Federal Wind Energy Program. The Pacific Northwest Laboratory, Richland, Washington, conducts the wind energy research for DOE. Finally, large, horizontal-axis wind turbine research and technology development are conducted for DOE by the NASA Lewis Research Center, Cleveland, Ohio.

The technology advancement is marked when one reviews the three generations of large, horizontal-axis wind turbines that have been created in a relatively short time. But continued wind turbine technology development is needed. The significant capital cost reductions that are projected must be verified. Improvements in reliability and operating performance are required in order to meet competitive COE goals. The participation of utilities in continuing the development of wind turbines is essential. Maintenance requirements and the associated skills required, economies of scale, and the distances between good wind sites and population centers make the utility industry the logical primary market for large machines.

The rapid advances made by wind turbine development over the last decade have been fostered by the Federal Wind Energy Program in a series of experiments on progressively more advanced large, horizontal-axis wind turbines. The first generation of these machines included (1) the Mod-0 machine, rated at 100 kW, first tested in 1975 at NASA's Plum Brook Station near Sandusky, Ohio; (2) four Mod-0A machines, each rated at 200 kW, at Clayton, New Mexico; Culebra Island, Puerto Rico; Block Island, Rhode Island; and Oahu, Hawaii; and (3) the Mod-1, rated at 2000 kW, near Boone, North Carolina. The more advanced second-generation machine development is characterized by the Mod-2 cluster of three wind turbines at Goodnoe Hills, Washington, and the Hamilton Standard SVU WTS-4 machine near Medicine Bow, Wyoming. Each Mod-2 is rated at 2500 kW. The SVU WTS-4 machine is rated at 4000 kW. The most advanced machine, the Mod-5B (3000 kW), now in the final design stage, represents the third generation of wind turbine development.

The Mod-0 wind turbine is currently the principal test bed for the continuing DOE/NASA research and technology program. Investigations currently under way include advanced rotor blade airfoil development, aileron control of rotor power, and variable-speed generator development.

Research and technology development projects are carried out in aerodynamics, structural dynamics, composite materials, and multiple-machine effects. Airfoil research is currently under way for wind turbine rotors. The objective is to improve rotor performance by using airfoils expressly designed for a wind turbine. The vibration effects on a wind turbine resulting from the experimental operation of a single-blade rotor need to be investigated by structural dynamic researchers. Environmental effects on laminated-wood-epoxy composite structural components are being examined by composite materials researchers. The Mod-2 wind turbine cluster at Goodnoe Hills, Washington, is the primary experimental test facility for investigating the interactions of three machines operating together or separately. Research is currently being conducted to assess the variation in performance of one Mod-2 wind turbine operating in the downwind wake of another operating Mod-2.

The Mod-0A machines are the only experimental machines with a long history of performance. These machines operated in different locations to supply energy to different utility networks. Over a 4½-year period these four Mod-0A machines have collectively operated over 38 000 hours and supplied over 3600 MWh of electricity to the participating utilities. Although last to be installed, the unit in Hawaii produced the most energy. This wind turbine's relatively good performance stems from the high annual wind speed at the site and from the fact that this unit incorporated a number of improvements over the other three Mod-0A machines.

Achievements of the Mod-0A project include verifying the durability of new low-cost rotor blade concepts, validating analytic design codes, clarifying the requirements for wind turbine utility compatibility, and providing baseline data on control concepts, component reliability, and overall machine performance.

The Mod-1 wind turbine successfully validated the methods for predicting power, loads, and dynamics for a megawatt-size wind turbine. In addition, key experiments were performed and siting lessons learned regarding television interference and noise generation in populated areas.

Although both the first-generation (Mod-0A and Mod-1) projects were technically successful, they were not attractive from a commercial point of view for continued utility operation. As a result, three of these first-generation machines have been removed from the utility sites. The remaining two Mod-0A machines are currently being disposed of.

The current state of the art in experimental large, horizontal-axis wind turbines is represented by the 2.5-MW Mod-2 and the 4-MW WTS-4. Five experimental Mod-2 machines are currently operating. Three of these machines, located at Goodnoe Hills, Washington, are providing excellent research data, under DOE sponsorship and with the support and cooperation of the Bonneville Power Administration. The fourth and fifth Mod-2's were constructed and installed by the Boeing Engineering and Construction Company for the U.S. Bureau of Reclamation near Medicine Bow, Wyoming, and for the Pacific Gas and Electric Company in Solano County, California, respectively. The WTS-4 was designed and installed by the Hamilton Standard Division of United Technologies Corporation for the Bureau of Reclamation near Medicine Bow, Wyoming. By June 1983, the cluster of three Mod-2 machines at Goodnoe Hills had accumulated a combined operating time of about 3800 hours and generated over 4100 MWh of energy. Data from the operation of these machines will contribute to improvements to wind turbines in the future.

The third generation of large wind turbines, the Mod-5, is now in the detailed final design stage. The goal of the advanced multimegawatt Mod-5 machine is to generate electricity for 3.75 ¢/kWh in 1980 dollars. Currently DOE is sponsoring and the NASA Lewis Research Center is managing one cost-sharing project at Boeing. The manufacturer is currently working with cooperating utilities to help support the project.

An early and continuing objective of the Federal Wind Energy Program is to transfer the technology learned from the Government-sponsored projects to those U.S. industries having an interest in manufacturing and marketing wind turbines. The many Federally sponsored technical reports published have been sent to a variety of U.S. industries involved with wind energy. Periodic conferences and workshops on wind energy that were started in 1973 are continuing. These conferences have been and continue to be well attended by U.S. and foreign industries. Many new companies have formed since 1973 with the sole purpose of producing and marketing wind turbines for profit. It is apparent that the objective of transferring Government-sponsored technology to industry is being met. However, for the large horizontal-axis wind turbines suitable for utility application, additional Federally sponsored research and technology development is needed to maintain the industry's present momentum.

References

1. Linscott, B. S.; Glasgow, J. C.; Anderson, W. D.; and Donham, R. E.: Experimental Data and Theoretical Analysis of an Operating 100 kW Wind Turbine, NASA TM-73883, 1978.
2. Design Study of Wind Turbines, 50 kW to 3000 kW for Electric Utility Applications: Executive Summary. NASA CR-134936, 1977.
3. Design Study of Wind Turbines 50 kW to 3000 kW for Electric Utility Applications: Summary Report. NASA CR-134934, 1976.
4. Andersen, T. S.; et al.: Mod-0A 200 kW Wind Turbine Generator Design and Analysis Report: Executive Summary. (AESD-TME-3051, Westinghouse Electric Corp.; NASA Contract DEN3-163.) DOE/NASA/0163-1, NASA CR-165127, 1980.
5. Andersen, T. S.; et al.: Mod-0A 200 kW Wind Turbine Generator Design and Analysis Report (AESD-TME-3052, Westinghouse Electric Corp.; NASA Contract DEN3-163.) DOE/NASA/0163-2, NASA CR-165128, 1980.
6. Andersen, T. S.; et al.: Mod-0A 200 kW Wind Turbine Generator Engineering. Final Engineering Drawing Report. (AESD-TME-3053, Westinghouse Electric Corp.; NASA Contract DEN3-163.) DOE/NASA/0163-3, NASA CR-165129, 1980.
7. Linscott, S.; Shaltens, R. K.; and Eggers, A. G.: Aluminum Blade Development for the Mod-0A 200-Kilowatt Wind Turbine. NASA TM-82594, 1981.
8. Electrical World Directory of Electric Utilities (1974-1975). 83rd ed., McGraw-Hill Publishing Co., 1974.
9. Collins, J. L.; et al.: Experience and Assessment of the DOE-NASA Mod-1 2000-Kilowatt Wind Turbine Generator at Boone, North Carolina. NASA TM-82721, 1982.
10. Mod-2 Wind Turbine System Concept and Preliminary Design Report, Vol. II: Detail Report (DE-A101-79ET-20305, Boeing Engineering and Construction Co.; NASA Contract DEN3-2.) DOE/NASA/0002-80/2, NASA CR-159609, 1979.
11. Linscott, B. S.; Dennett, J. T.; and Gordon, L. H.: The Mod-2 Wind Turbine Development Project. NASA TM-82681, 1981.
12. Gordon, L. H.: Mod-2 Wind Turbine System Cluster Research Test Program, Vol. I—Initial Plan. NASA TM-82906, 1982.
13. Vas, Irwin E., ed.: Fifth Biennial Wind Energy Conference Workshop. SERI/CP-635-1340 CONF-811043, Midwest Research Institute, 1981.
14. Wind Energy Resource Atlas. Volumes 1-12. PNL-3195-WERA-1-12, Battelle Pacific Northwest Laboratory, 1980-1981.
15. Hiester, T. R.; and Pennell, W. T.: The Meteorological Aspects of Siting Large Wind Turbines. PNL-2522, Battelle Pacific Northwest Laboratory, 1981.
16. Savino, J. M.; and Wagner, L. H.: Wind Tunnel Measurements of the Tower Shadow on Models of the ERDA/NASA 100 kW Wind Turbine Tower. NASA TM X-73548, 1976.
17. Savino, J. M.; Wagner, L. H.; and Sinclair, D.: Wake Characteristics of an Eight-Leg Tower for a Mod-0 Type Wind Turbine. DOE/NASA/1028-77/14, NASA TM-73868, 1977.
18. Linscott, B. S.; Shapton, W. R.; and Brown, D.: Tower and Rotor Blade Vibration Test Results for a 100-Kilowatt Wind Turbine. NASA TM X-3426, 1976.
19. Das, D. C.; and Linscott, B. S.: Approximate Method for Calculating Free Vibrations of a Large Wind Turbine Tower Structure. ERDA/NASA-1028/77/12, NASA TM-73754, 1977.
20. Spera, D. A.: Comparison of Computer Codes for Calculating Dynamic Loads in Wind Turbines. DOE/NASA/1028-78/16, NASA TM-73773, 1977.
21. Spera, D. A.: Structural Analysis of Wind Turbine Rotors for NSF-NASA Mod-0 Wind Power System. NASA TM X-3198, 1975.
22. Hunnicutt, C. L.; Linscott, B.; and Wolf, R. A.: An Operating 200-kW Horizontal Axis Wind Turbine. NASA TM-79034, 1978.
23. Linscott, B. S.; Shaltens, R. K.; and Eggers, A. G.: Test Experience with Aluminum Blades on the Mod-0A 200-Kilowatt Wind Turbine at Clayton, New Mexico. DOE/NASA/220370-21, NASA TM-82595, 1981.
24. Reilly, D. H.: Safety Considerations in the Design and Operation of Large Wind Turbines. DOE/NASA/20305-79/7, NASA TM-79193, 1979.
25. Griffee, D. G., Jr.; Gustafson, R. E.; and More, E. R.: Design, Fabrication, and Test of a Composite Material Wind Turbine Rotor Blade. (HSER-7383, United Technologies Corp.; NASA Contract NAS3-19773.) NASA CR-135389, 1977.
26. Gewehr, H. W.: Design, Fabrication, Test, and Evaluation of a Prototype 150-ft Long Composite Wind Turbine Rotor Blade. (R-1575, Kaman Aerospace Corp., NASA Contract NAS3-20600.) NASA CR-159775, 1979.

27. Batesole, W. R.; and Gunsallus, C. T.: Design and Fabrication of Composite Blades for the Mod-1 Wind Turbine Generator. (RR-1685, Kaman Aerospace Corp.; NASA Contract DEN-3-131.) NASA CR-167987, 1981.
28. Weingart, O.: Design, Evaluation, and Fabrication of Low-Cost Composite Blades for Intermediate-Size Wind Turbines. (SCI-81520, Structural Composites Industries Inc.; NASA Contract DEN3-100.) NASA CR-165342, 1981.
29. Lieblein, S., et al.: Evaluation of Feasibility of Utilizing Wood Composites for the Design and Fabrication of Low Cost Wind Turbine Blades, NASA CR-
30. Lieblein, S.; Ross, R. S.; and Fertis, D. G.: Evaluation of Urethane for Feasibility of Use in Wind Turbine Blade Design. (TRS-101, Technical Report Services; NASA Order C-7653 E(49-26)-1028.) DOE/NASA/7653-79/1, 1979.
31. Lieblein, S.; et al.: Evaluation of Feasibility of Prestressed Concrete for Use in Wind Turbine Blades. DOE/NASA/5906-79/1, NASA CR-159725, 1979.
32. Gnecco, A. J.; and Whitehead, G. T.: Microprocessor Control of a Wind Turbine Generator. NASA TM-79021, 1978.
33. Yee, S. T.; et al.: Vibration Characteristics of a Large Wind Turbine Tower on Nonrigid Foundations. ERDA/NASA/1004-77/1, NASA TM X-73670, 1977.
34. Sullivan, T. L.; Miller, D. R.; and Spera, D. A.: Drive Train Normal Modes Analysis for the ERDA/NASA 100-Kilowatt Wind Turbine Generator. ERDA/NASA/1028-77/1, NASA TM-73718, 1977.
35. Seidel, R. C.; Gold, H.; and Wenzel, L. M.: Power Train Analysis for the DOE/NASA 100 kW Wind Turbine Generator. DOE/NASA/1028-78/19, NASA TM-78997, 1978.
36. Viterna, L. A.; and Janetzke, D. C.: Theoretical and Experimental Power from Large Horizontal-Axis Wind Turbines. DOE/NASA/20320-41, NASA TM-82944, 1982.
37. Hubbard, H. H.; Shepherd, K. P.; and Grosveld, F. W.: Broad Band Sound from Wind Turbine Generators. NASA CR-165810, 1981.
38. Corrigan, R. D.; and Viterna, L. A.: Free Yaw Performance of the Mod-0 Large Horizontal Axis 100 kW Wind Turbine. Large Horizontal-Axis Wind Turbines. NASA CP-2230, 1982, pp. 103-124.
39. Kamoulakos, A.: Stability Analysis of Flexible Wind Turbine Blades Using Finite Element Method. (MIT-ARSL-TR-197-3, Massachusetts Institute of Technology; NASA Grant NSG-3303.) NASA CR-168107, 1982.
40. Andersen, T. S.; et al.: Multiple and Variable Speed Electrical Generator Systems for Large Wind Turbines. Large Horizontal-Axis Wind Turbines. NASA CP-2230, 1982, pp. 125-138.
41. Hofer, K. E.; and Bennett, L. C.: Fatigue Testing of Low-Cost Fiberglass Composite Wind Turbine Blade Materials. (IITRI-M06066-22, IIT Research Institute; NASA Contract DEN3-182.) 1981.
42. Doran, J. C.; and Packard, K. R.: Comparison of Model and Observations of the Wake of Mod-0A Wind Turbine. PNL-4433, Pacific Northwest Laboratory, 1982.
43. Ramler, J. R.; and Donovan, R. M.: Wind Turbines for Electric Utilities; Development Status and Economics. DOE/NASA/1028-79-23, NASA TM-79170, 1979.

Bibliography

Eldridge, F. R.: Proceedings of the Second Workshop on Wind Energy Conversion Systems. MTR-6970, NSF-RA-N-75-050, Mitre Corp., 1975.

Fifth Biennial Wind Energy Conference and Workshop. SERI/CP-635-1340, CONF-811043, 1981.

Lieblein, S.: Large Wind Turbine Design Characteristics and R&D Requirements. NASA CP-2106, 1979.

Miller, D. R., ed.: Wind Turbine Structural Dynamics. NASA CR-2034, 1978.

NSF/NASA/Utility Wind Energy Conference. NASA TM-79508, 1974.

Proceedings of the Third Biennial Conference and Workshop on Wind Energy Conversion Systems. CONF-770921, 1977.

Proceedings of the Fourth Biennial Conference and Workshop on Wind Energy Conversion Systems. CONF-791097, 1979.

Savino, J. M.: Wind Energy Conversion Systems. NASA TM X-69786, 1973.

Thresher, R. W.: Wind Turbine Dynamics. NASA CP-2185, 1981.

Thresher, R. W.: Large Horizontal-Axis Wind Turbines. NASA CP-2230, 1982.

1. Report No.
NASA TM-83546

2. Government Accession No.

3. Recipient's Catalog No.

4. Title and Subtitle
Large, Horizontal-Axis Wind Turbines

5. Report Date
March 1984

6. Performing Organization Code
776-33-41

7. Author(s)
Bradford S. Linscott, Lewis Research Center; Porter Perkins, Analex Corporation, Lewis Research Center; and Joann T. Dennett, RDD Consultants, Inc., Boulder, Colorado

8. Performing Organization Report No.
E-1920

9. Performing Organization Name and Address
National Aeronautics and Space Administration
Lewis Research Center
Cleveland, Ohio 44135

10. Work Unit No.

11. Contract or Grant No.

12. Sponsoring Agency Name and Address
U.S. Department of Energy
Division of Photovoltaic Energy Technology
Washington, D.C. 20545

13. Type of Report and Period Covered
Technical Memorandum

14. Sponsoring Agency ~~Code~~ Report No.
DOE/NASA/20320-58

15. Supplementary Notes
Final report. Prepared under Interagency Agreement DE-AI01-76ET20320.

16. Abstract

The large-wind-turbine program is a major segment of the Federal Wind Energy Program sponsored by the Department of Energy (DOE). The NASA Lewis Research Center manages the program on large horizontal-axis wind turbines for DOE. This program is directed toward development of the technology for safe, reliable, environmentally acceptable large wind turbines that have the potential to generate a significant amount of electricity at costs competitive with conventional electric generating systems. In addition, these large wind turbines must be fully compatible with electric utility operations and interface requirements. There are several ongoing large-wind-system development projects and applied research efforts directed toward meeting the technology requirements for utility applications. The first-generation-technology machines (Mod-0A and Mod-1) have successfully completed their planned periods of experimental operation. Disposition of these machines is nearly complete. The second-generation machines (Mod-2's) continue experimental operation at Goodnoe Hills, Wash., and Medicine Bow, Wyoming. Design and engineering development of a third-generation (Mod-5) machine is under way. This report provides detailed information on these projects. It describes the Mod-0 research facility and current applied research effort in aerodynamics, structural dynamics and aeroelasticity, composite and hybrid composite materials, and multiple-system interaction. A chronology of component research and technology development for large, horizontal-axis wind turbines is presented. Wind characteristics, wind turbine economics, and the impact of wind turbines on the environment are reported. The need for continued wind turbine research and technology development is explored. Over 40 references are sited and a bibliography is included.

17. Key Words (Suggested by Author(s))
Wind turbines
Wind power
Wind energy

18. Distribution Statement
Unclassified - unlimited
STAR Category 44
DOE Category UC-60

19. Security Classif. (of this report)	20. Security Classif. (of this page)	21. No. of pages	22. Price*
Unclassified	Unclassified	69	A04

*For sale by the National Technical Information Service, Springfield, Virginia 22161

NASA-Langley, 1984

National Aeronautics and
Space Administration

Washington, D.C.
20546

Official Business
Penalty for Private Use, $300

THIRD-CLASS BULK RATE

Postage and Fees Paid
National Aeronautics and
Space Administration
NASA-451

U.S.MAIL

NASA

POSTMASTER: If Undeliverable (Section 158
Postal Manual) Do Not Return